Specifications

Otto Environmental Systems

12700 General Drive

Charlotte, North Carolina 28273

RECYCLING BIN

18 GALLON

WIDTH: 26.16″
DEPTH: 16″
HEIGHT: 13.38″

MODEL	18-Gallon Recycling Bin
ASSEMBLY WEIGHT	approx. 4 lbs
UNITS PER PALLET (BIN)	200
UNITS PER PALLET (LID)	400
LTL UNITS PER PALLET (BIN)	8
LTL UNITS PER PALLET (LID)	10
LTL MAX QUANTITY	1,200
TOTAL QUANTITY (53’ TRUCK)	5,000

VETERAN OWNED

RECYCLING BIN

USER-FRIENDLY BIN FOR RECYCLING PROGRAMS

Optional 18 gallon lid fits securely over the bin's rim

Ergonomic handle design

Unique nesting design reduces distribution costs and makes containers convenient to stack and store

Designed to withstand rough handling and extreme weather conditions

Available with or without drain holes

Lid latch, along with matching curves, fastens lid securely to bin. Flexible handles with latch enables easy release and fastening. Keeps recyclable items dry while out for collection and deters insects and pests. Lid corrugation helps lid keep its shape.

AVAILABLE COLORS

The Momentum container is available in eight standard colors. Over 80 custom colors available upon request.

68 - Dark Blue
51 - Light Blue
56 - Green
65 - Forest Green
50 - Dark Gray
57 - Light Gray
63 - Brown
60 - Black

YOUR CART YOUR WAY!

Customize your bin with hot stamps or ColorFUSE technology. We can also include serialization, RFID, barcodes, and more.

Make your bins, ***Truly Your Bins.***

Contact your Area Sales Manager to explore your options.

Duramax Holdings LLC dba Otto Environmental Systems
12700 General Drive, Charlotte, North Carolina 28273
800-795-6886 • info@otto-usa.com • otto-usa.com
© Duramax Holdings, LLC dba Otto Environmental Systems

Otto/06012023

95EDGE

MODEL	Edge 95G
LOAD RATING	335 lbs
ASSEMBLY WEIGHT	approx. 37.8 lbs
STACKING	8 High
LTL STACKING	7 High
TOTAL QUANTITY (53’ TRUCK)	504

VETERAN OWNED

95EDGE

BUILT FOR TODAY'S COLLECTION NEEDS

Durability increased with "double-pinned" lid attachment

Longevity increased with contoured lid that reduces warp and water entrapment

Molded foot access and large handle make maneuvering easier, even with heavy loads in place

Sanitary, easy-open lift lip

Lasts longer with UV resistant plastic for long-term exposure to sunlight

Corrosion-resistant hardware protects and increases durability

Unique, contoured body designed for automated lifting equipment

AVAILABLE COLORS

The Edge container is available in eight standard colors. Over 80 custom colors available upon request.

68 - Dark Blue | 51 - Light Blue | 56 - Green | 65 - Forest Green

50 - Dark Gray | 57 - Light Gray | 63 - Brown | 60 - Black

YOUR CART YOUR WAY!

Your cart is your billboard; every trash day passersby see your company name. Take the opportunity to stand out from the rest.

At Otto, we work with you to design your carts so you get the most from your investment.

Customize your cart with color logos, lid graphics, or custom color. We can also include serialization, RFID, barcodes, and more.

Make your carts, ***Truly Your Carts.***

Contact your Area Sales Manager to explore your options.

Duramax Holdings LLC dba Otto Environmental Systems
12700 General Drive, Charlotte, North Carolina 28273
800-795-6886 • info@otto-usa.com • otto-usa.com
© Duramax Holdings, LLC dba Otto Environmental Systems

Otto/06012023

MSD-95E "Edge" Container

The Otto Multi-System Design MSD-95E "Edge" rollout container consists of injection-molded, high density polyethylene plastic body, hinged lid, two (2) hinge pins, two (2) plastic wheel assemblies, and a solid steel axle.

The Otto MSD-95E rollout refuse container is compatible with fully automated arm lifter systems and standard, semi-automated bar lifter systems.

This container complies with ANSI Z245.30-2008 and ANSI Z245.60-2008 standards for Container Safety and Compatibility Requirements.

VOLUME CAPACITY:

The total actual volume of the Otto MSD-95E container is 102.3 gallons (per ANSI Z245.30-2008, Appendix A, Volumetric Loading Capacity).
Base: 96.7 gal Lid: 5.6 gal

LOAD RATING:

Per the ANSI Z245.30-2008 Standard, the Otto MSD-95E rollout refuse container is capable of accommodating a load of 335 lbs.

WEIGHT:

The completed assembly weight of the Otto MSD-95E container is 37.8 lbs. when equipped with Otto's 10" injection molded wheels. Other wheel options are also available.

DIMENSIONS:

Loading Height: 41.75"
Overall Height: 45.38"
Overall Width: 27.50"
Overall Depth: 33.25"
Minimum Grip Diameter: 27.1"

© OTTO ENVIRONMENTAL SYSTEMS NORTH AMERICA, INC.

CONTAINER BODY:

The Otto MSD-95E Container Body is injection-molded from High Density Polyethylene (HDPE). The container body has smooth surfaces both on the interior and exterior. The interior is free of crevices and recesses where refuse could become trapped, in order to allow complete emptying. The wall thickness is up to 0.19" on the container sidewalls and 0.19" on the bottom section. The high-density polyethylene has a density of 0.945 to 0.954 grams cm3. The Melt Index (MI) of the HDPE is 3.5 to 6.0.

The top of the container body is reinforced with a rim around its entire perimeter. This feature adds structure and stability to the Otto MSD-95E container and provides a flat surface for the lid to close on. The top of the rim has a rain lip to prevent water from entering the container with the lid closed. The handles are integrally molded into the container body at the top rim. The underside of the rim is reinforced with a total of thirty-one (31) integrally molded-in gussets spaced around the entire circumference of the container.

The front of the container has a molded recess that provides for the front “catch,” or lower lift, bar. The Otto MSD-95E container is offered with 1" rotating steel catch bar.

The clip-style metal catch bar is freely rotating, 1" OD (outside diameter) roll-formed steel with formed ends for added strength. The wall thickness of this bar is .050", hot rolled steel with an iron zinc clear chromate top coat shielding for corrosion protection. The clip-style metal catch bar allows for speedy installation of the bar from the outside of the container without requiring the use of any hand tools. Metal spring clips are compressed during installation and spring back once inside the container for a solid stop once installed.

The bottom of the container has molded in wear ridges that extend around its perimeter. The wear ridges provide additional protection against abrasive wear if the container is slid on asphalt or pavement and improve impact resistance of the bottom of the container. There is a recessed area molded above the middle of the axle which allows a person’s foot to be placed directly upon the axle to allow the container to be easily tilted, even with a full load.

The inside bottom of the Otto MSD-95E container has a cylindrical-shaped energy absorbing detail, approximately 7" in diameter, integrally molded into its floor. This detail has been engineered to protect the floor of an empty container from impact when being loaded with heavy objects.

The Otto rollout container has an integrally molded front “pouch” to facilitate semi-automated lifting. The front wall of the pouch has eleven (11) corrugations in order to support the lifting platform under maximum load lifting forces. This upper pouch is reinforced with a pattern of eight (8) internal ribs. These ribs add strength and structure to the lifting pouch and front of the container.

© OTTO ENVIRONMENTAL SYSTEMS NORTH AMERICA, INC.

Otto containers are designed for nesting and easy stacking for shipment and storage. Stacking ribs are molded onto the exterior of the top rim to prevent containers from becoming wedged together during shipment.

The weight of the container body is 27.05 lbs. This weight does not include any other components.

LID:

The Otto MSD-95E container Lid is injection- molded from HDPE and is attached to the container body using two (2) HDPE snap-lock hinge pins. The lid rotates freely about the hinge a full 270 degrees. The lid, when closed, rests on the top rim of the container body, providing a secure tight fit around the entire perimeter between the lid and base. This prevents rain, insects and vermin from entering the container, as well as preventing the escape of most odors when the lid is closed.

The lid is molded with a hand-hold lip that extends across the full width of the front of the lid and wraps around both corners. This allows the lid to be easily opened from three sides without contact with refuse or residue.

The Otto MSD-95E lid attachments are cylindrical-shaped and double-ribbed, creating an extremely robust attachment to the container body. The locking mechanism for the lid hinge pin, which is inserted into the attachments, is retained beneath a molded-in step feature within the lid.

The minimum material thickness in the lid is 0.12".

The weight of the lid is 4 lbs.

HINGE PIN:

The Otto MSD-95E lid Hinge Pins are injection-molded from HDPE. The hinge pins secure the lid to the integrally molded lid hinge and handle detail. Two (2) hinge pins are used to secure the lid. The hinge pins are installed at the factory using a rubber mallet. At installation, the truncated conical center portion of the hinge pin compresses and snaps into the open slot in each side of the handle detail. This prevents vandalism and securely fastens the lid to the container base. The hinge pins can be removed with a special tool available from Otto.

LID HINGE AND HANDLE DETAIL:

The Otto MSD-95E Lid Hinge is integrally molded to the container body and lid. The diameter is 1.2" and provides 1.87" clearance for gloved hands.

© OTTO ENVIRONMENTAL SYSTEMS NORTH AMERICA, INC.

AXLE:

The Otto MSD-95E machined solid steel Axle has a 27/32" diameter. The axle is zinc plated to protect against rust and corrosion. The large diameter of the axle allows the container to be easily rolled on any surface and supports a fully loaded container. The axle will withstand a 375-lb. load without permanent deformation. The weight of the axle is 4 lbs.

WHEELS:

The Otto MSD-95E container may be fitted with either 10" or (optional) 12" wheels.

	Plastic Blow-molded	Snap-on Blow-molded	Cushion-Tread	Solid Rubber Tire	Injection Molded 10"
Description	HDPE, blow-molded, separate spacers.	HDPE, blow-molded, integrated spacers.	Injection-molded hub (HDPE) with rubberized cushion tread, separate spacers.	Injection-molded hub (HDPE) with pressed-on solid rubber tire, integrated spacers.	Injection-molded hub (HDPE), integrated spacers.
Wheel Diameter	10" diameter	10" diameter	10" diameter	10" diameter	10" diameter
	1.75" width – or –	1.75" width – or –	1.75" width – or –	1.75" width – or –	1.75" width
	12" diameter	12" diameter	12" diameter	12" diameter	
	1.75” width	1.75” width	1.75 width	1.75” width	
Load Rating	200 lbs.	200 lbs.	200 lbs.	200 lbs.	200 lbs.
Attachment	Zinc-plated palnut end caps.	Internal “snap-lock” attachment.	Internal “snap-lock” attachment.	Internal spring-loaded steel detent for snap-on.	Internal spring-loaded steel detent for snap-on.
Weight (per wheel assembly)	1.27 lbs. (10")	1.27 lbs. (10")	1.48 lbs.(10")	1.88 lbs. (10")	1.4 lbs. (10")
	1.8 lbs. (12")	1.96 lbs. (12")	2.15 lbs. (12")	2.24 lbs. (12")	

MARKINGS:

All Otto MSD-95E carts are hot stamped with a unique sequenced serial number to facilitate distribution and control. The customer's name or logo can be hot stamped on

© OTTO ENVIRONMENTAL SYSTEMS NORTH AMERICA, INC.

the container's body or lid. The containers are permanently marked with the month and year of production, mold number, material identification, patent number, model, and manufacture's insignia.

WORKMANSHIP:

The Otto MSD-95E plastic material — high-density polyethylene — is manufactured from virgin raw materials by major petrochemical companies, (e.g., Exxon, Chevron-Phillips, Quantum) and includes no recycled or regenerated plastic or foreign material. Up to 50% recycled material (PCR) content may be available upon request on particular colors, where suitable feedstock is available.

COLOR:

Otto's standard colors are Dark Blue, Light Blue, Green, Forest Green, Dark Gray, Light Gray, Brown, and Black. Other colors are available to special order.

All injection-molded parts are specifically prepared to be colorfast so that the plastic material does not alter appreciably in normal use. Due to the use of UV (ultraviolet) stable pigment and injection molding process, Otto containers have excellent color fastness.

UV LIGHT STABILIZATION:

The Otto MSD-95E container is stabilized against ultraviolet degradation with not less than 0.3% UV additives. This is a state-of-the-art package that meets or exceeds older systems requiring 0.5% UV additive by weight and provides product viability for a minimum of 10 years of outdoor exposure.

RECYCLABILITY:

The Otto MSD-95E container is produced with a fully recyclable thermoplastic High Density Polyethylene (HDPE) resin. This allows the material to be recycled and reused after the useful life of the container.

QUALITY ASSURANCE PROCEDURES AND PERFORMANCE TESTING:

The MSD-95E Container is designed to withstand the following series of performance tests. The performance test requirements were designed to simulate the type of situations encountered in actual use. The severity of some tests was scaled to anticipate an expected 10-year life.

© OTTO ENVIRONMENTAL SYSTEMS NORTH AMERICA, INC.

Test Description	Test Requirements
Semi-Automated Lifter Life Cycle	ANSI Z245.30-2008
Fully-Automated Lifter Life Cycle	ANSI Z245.30-2008
Drop Test (335 Lb. @ 12 Feet)	10 Drops without Damage
Wind Test	See 3rd party wind resistance testing
Axle Durability (Bend) Test	ANSI Z245.30-2008
Durability During Pulling Test	ANSI Z245.30-2008

The following Quality Assurance tests are performed according to ASTM procedures.

Material Testing

1. Melt Flow Index Test: To check that the polymer batch matches the supplier certification. This is testing procedure ASTM D1238.
2. Colorant Color Match: Compare lot based color chips to the color chip master to ensure consistency.

In-Process Quality Tests

1. Drop Test: Cart is raised 12' under load and dropped 4 consecutive times. This provides that there is not a processing issue.
    a. 95 gallon- 335lbs
2. Bib Pull Test: Bib pulled to failure to evaluate brittleness. Bib should break tensile.
3. Bar Pull Test: Bar pulled to failure. Determines if there is weakness at knit line at center of plastic bar. Bar should break off center.
4. Fit Checks: Mating components (axle, lift bar, lid) installed onto carts after cooled to ensure proper fit, form & function.
5. Weight & Thickness Checks: Evaluates molding process.

All designs, specifications, and components are subject to change at the manufacturer's sole discretion at any time without notice. Data published herein is informational in nature and shall not be construed to warranty suitability of the unit for any particular purpose as performance may vary with the conditions encountered.

© OTTO ENVIRONMENTAL SYSTEMS NORTH AMERICA, INC.

TESTING REPORT

DATE: 1 November 2007
SUBJECT: Trash carts
PRODUCT IDENTIFICATION: MSD-95E

TEST: **WIND TUNNEL**

TEST DESCRIPTION: This test is a measure of the stability of the cart in a high wind. Although not specifically tied to the basic purpose of the cart, most consumers would object to a cart that often tipped over and spilled the contents.

MINIMUM PERFORMANCE STANDARD: The specification varies from site to site depending upon prevalent wind conditions, etc. Most manufacturers expect the cart to be stable up to at least 30 mph.

TEST PROCEDURE:

1. A large wind tunnel with a 54 inch diameter exit opening is used for the test. The wind was supplied by a Gates Super HC drive.
2. Position the cart 48 inches from the end of the exit opening. (Beyond stagnant air zone.)
3. The bottom of the cart is to be level with the exit opening and is to rest on a concrete surface that has a surface texture similar to a roadway.
4. The bottom of the cart is placed against a 6 inch brace (like a curb) to prevent the cart from rolling or sliding.
5. The wind velocity is raised until the cart starts to move. This wind speed is measured using a certified volometer.
6. Measure the air velocity to tip the cart, either free-standing or against the curb if it has rolled or slid.
7. Test cart in three orientations toward the wind tunnel opening – front, side and back.
8. The procedure was performed using a blow-molded wheel and then repeated using an injection molded wheel with rubber tread.

TEST RESULTS:

Test	Orientation Towards Wind Tunnel		
	Front	Side	Back
Wind speed to tip the cart*	43 mph	59 mph	63 mph

* Unless otherwise noted, the lid lifting either did not occur or occurred simultaneously with cart tipping

SUMMARY: The cart was stable in moderate to high winds.

A. Brent Strong
Professor, Manufacturing Engineering
Brigham Young University
265 CTB, Provo, UT 84602

bab

Structural Engineering Services, PLLC
3017Clark Street Charlotte NC
Phone: 704.507.4014
E-mail: bbarfield@babstruct.com

TESTING REPORT

DATE: 15 July 2015
SUBJECT: Trash carts
PRODUCT IDENTIFICATION: MSD-95E

TEST: **SLOPE STABILITY**

TEST DESCRIPTION: This test checks the static stability of an empty and loaded cart on a defined slope (5 degrees).

MINIMUM PERFORMANCE STANDARD: ANSI Z245.30 requires that the cart must stand, without tipping or moving, in three different orientations on a defined slope. ANSI Z245.60 establishes dimensional requirements for the cart.

TEST PROCEDURE (Meets the requirements of ANSI Z245.30):

1. Prepare a ramp with a slope of 5 degrees. The ramp must be of sufficient size that a cart can be moved onto the cart with no portion of the cart overhanging the edges of the ramp.
2. There is to be no wind.
3. Move an empty cart onto the ramp and orient the cart with the front of the cart facing up the ramp. Note any tipping or movement. Turn the cart so that the front of the cart is facing sideways on the ramp. Note any tipping or movement. Turn the cart so that the front of the cart is facing down the ramp. Note any tipping or movement.
4. Repeat step two with the cart loaded to the standard loading as specified in the ANSI standard. The loading material to occupy at least 70% of the capacity of the cart.

TEST RESULTS:

	Orientation	Result
Empty	Front facing upward	Stable
	Front facing sideways (right)	Stable
	Front facing sideways (left)	Stable
	Front facing downward	Stable
Filled (loaded lbs)	Front facing upward	Stable
	Front facing sideways (right)	Stable
	Front facing sideways (left)	Stable
	Front facing downward	Stable

SUMMARY: The cart passed the ANSI Z245.30 and Z245.60 standards since non-movement in three orientations is met.

Sincerely,

Blaine A. Barfield, P.E.

bab Structural Engineering Services, PLLC

NORTH CAROLINA PROFESSIONAL SEAL 035798 ENGINEER BLAINE A. BARFIELD

07-15-2015

bab

Structural Engineering Services, PLLC
3017Clark Street Charlotte NC
Phone: 704.507.4014
E-mail: bbarfield@babstruct.com

TESTING REPORT

DATE: 15 July 2015
SUBJECT: Trash carts
PRODUCT IDENTIFICATION: MSD-95E

TEST: **LIDTEST**

TEST DESCRIPTION: To determine if a container lid will sustain the weight of an average child (approximately 80 pounds) without collapsing into the container.

MINIMUM PERFORMANCE STANDARD: According to ANSI Z245.30, the lid of the cart must withstand a load of 80 pounds without collapsing or allowing the loading weight to fall into the container. ANSI Z-245.60 establishes dimensional requirements for the cart.

TEST PROCEDURE (Meets the requirements of ANSI Z245.30):

1. The cart is placed on a smooth, level, horizontal surface.
2. A weight of 80 pounds with a surface area diameter round of 8 inches is placed on the lid of the cart.
3. The test is to be conducted at room temperature.

TEST RESULTS:

The lid did not collapse or excessively deflect during the test.

SUMMARY: The cart passed the test at or above minimum requirements as specified in ANSI Z245.30 and Z245.60.

Sincerely,

Blaine A. Barfield, P.E.
bab Structural Engineering Services, PLLC

NORTH CAROLINA PROFESSIONAL SEAL 035798 ENGINEER BLAINE A. BARFIELD

07-15-2015

bab

Structural Engineering Services, PLLC
3017Clark Street Charlotte NC
Phone: 704.507.4014
E-mail: bbarfield@babstruct.com

TESTING REPORT

DATE: 15 July 2015
SUBJECT: Trash carts
PRODUCT IDENTIFICATION: MSD-95E (10-inch wheels)

TEST: **DURABILITY DURING PULLING (CURB TEST)**

TEST DESCRIPTION: This test determines whether the cart's handles, wheels, and axles will withstand the repeated pulling forces experienced during normal 10-year useful life.

MINIMUM PERFORMANCE STANDARD: The ANSI standanrL245.30-2008 requires that after testing the handles, wheels, axles, their attachments to the container, and the container itself must remain functional. ANSI 2245.60-2008 establishes dimensional requirements for the cart.

TEST PROCEDURE (Meets the requirements of ANSI 2245.30-2008):

1. The cart is loaded with a standard load (according to the ANSI standard) with the volume of material occupying at least 70% of the total capacity of the cart. (The actual weight was 350 pounds.)
2. Using the cart's handles, the loaded cart is pushed off a curb. The curb height was 5.5 inches. The cart is then repositioned at the top of the curb. The test is repeated for 520 cycles (drops).
3. Using the cart's handles, an unloaded (empty) cart is pulled up a curb. The curb height was 5.5 inches. The cart is repositioned at the bottom of the curb. The test is repeated 520 cycles (lifts).
4. The carts are set down onto a concrete surface.
5. The temperature to be normal room temperature (73 degrees F).

TEST RESULTS

Test Condition	Result
Push off of full cart	No significant damage
Pull up of empty cart	No significant damage

SUMMARY: The cart passed the ANSI 2245.30-2008 and 2245.60-2008 standards for minimum performance.

Sincerely,

Blake A. Barfield, P.E.
bab Structural Engineering Services, PLLC

NORTH CAROLINA PROFESSIONAL SEAL 035798 ENGINEER BLAKE A. BARFIELD

6-7-2018

bab

Structural Engineering Services, PLLC
3017Clark Street Charlotte NC
Phone: 704.507.4014
E-mail: bbarfield@babstruct.com

TESTING REPORT

DATE: 15 July 2015
SUBJECT: Trash carts
PRODUCT IDENTIFICATION: MSD-95E (12-inch wheels)

TEST: **DURABILITY DURING PULLING (CURB TEST)**

TEST DESCRIPTION: This test determines whether the cart's handles, wheels, and axles will withstand the repeated pulling forces experienced during normal 10-year useful life.

MINIMUM PERFORMANCE STANDARD: The ANSI standard Z245.30-2008 requires that after testing the handles, wheels, axles, their attachments to the container, and the container itself must remain functional. ANSI Z245.60-2008 establishes dimensional requirements for the cart.

TEST PROCEDURE (Meets the requirements of ANSI Z245.30-2008):

1. The cart is loaded with a standard load (according to the ANSI standard) with the volume of material occupying at least 70% of the total capacity of the cart. (The actual weight was 350 pounds.)
2. Using the cart's handles, the loaded cart is pushed off a curb. The curb height was 5.5 inches. The cart is then repositioned at the top of the curb. The test is repeated for 520 cycles (drops).
3. Using the cart's handles, an unloaded (empty) cart is pulled up a curb. The curb height was 5.5 inches. The cart is repositioned at the bottom of the curb. The test is repeated 520 cycles (lifts).
4. The carts are set down onto a concrete surface.
5. The temperature to be normal room temperature (73 degrees F).

TEST RESULTS:

Test Condition	Result
Push off of full cart	No significant damage.
Pull up of empty cart	No significant damage

SUMMARY: The cart passed the ANSI Z245.30-2008 and Z245.60-2008 standards for minimum performance.

Sincerely,

Blaine A. Barfield, P.E.
bab Structural Engineering Services, PLLC

NORTH CAROLINA PROFESSIONAL SEAL 035798 ENGINEER BLAINE A. BARFIELD

7-15-2015

bab

Structural Engineering Services, PLLC
3017Clark Street Charlotte NC
Phone: 704.507.4014
E-mail: bbarfield@babstruct.com

TESTING REPORT

DATE: 15 July 2015
SUBJECT: Trash carts
PRODUCT IDENTIFICATION: MSD-95E

TEST: **CENTER OF BALANCE POSITION**

TEST DESCRIPTION: To determine the height of the handle of a two-wheeled container at the center-of-balance position. This height affects the ease of operation of the cart.

MINIMUM PERFORMANCE STANDARD: According to the ANSI standard Z245.30, when in the center-of-balance position, the minimum height is to be 29 inches. The maximum height is to be 40 inches when in the center-of-balance position. ANSI Z245.60 establishes dimensional requirements for the cart.

TEST PROCEDURE (Meets the requirements of ANSI Z245.30):

1. The cart is loaded with a standard load (3.5 pounds per gallon of rated capacity with the load occupying at least 70% of the capacity) or with the maximum rated load.
2. The test to be conducted on a hard, flat surface.
3. Block the wheels so that the cart will not roll.
4. Tip the cart slowly, rotating the cart on the wheels, to the center balance position. This position is determined as the position where the cart has a tendency to remain in a balanced (neutral) position, not tipping forward or backward.
5. When in the center balance position, place blocks under the container to maintain in balanced position.
6. Measure the distance vertically from the ground plane to the center line of the handle of the cart. The accuracy of measurement is to be ±0.25 inches.
7. Repeat steps 4, 5 and 6 and then average the results for the three determinations.

TEST RESULTS:
The results are: Average = 38.0 inches

SUMMARY: The cart passed the ANSI Z245.30 and Z245.60 standards.

Sincerely,

Blaine A. Barfield, P.E.
bab Structural Engineering
Services, PLLC

NORTH CAROLINA PROFESSIONAL SEAL 035798 ENGINEER BLAINE A. BARFIELD

07-15-2015

bab

Structural Engineering Services, PLLC
3017Clark Street Charlotte NC
Phone: 704.507.4014
E-mail: bbarfield@babstruct.com

TESTING REPORT

DATE: 15 July 2015
SUBJECT: Trash carts
PRODUCT IDENTIFICATION: MSD-95E

TEST: **LOADING AND UNLOADING (CYCLE TEST)-SEMI-AUTOMATED**

TEST DESCRIPTION: The loading and unloading test is designed to approximate the useful life of a cart (10 years) in the actual lifting that is performed when emptying the cart into a semi- automated truck. This test is useful in assessing the overall design (such as the lid fit, handle material and hinge mechanism, wheel assembly strength, etc.) and overall durability.

MINIMUM PERFORMANCE STANDARD: ANSI standard Z245.30-2008 requires that after testing the cart should not suffer any damage or permanent deformation such that it cannot be safely used in normal operation. ANSI Z-245.60-2008 establishes dimensional requirements for the cart.

TEST PROCEDURE (Meets the requirements of ANSI Z245.30-2008):

1. The test is conducted at room temperature.
2. A standard semi-automated lifting mechanism is used. This lifter is compatible with all currently used carts. The lifting mechanism is attached to a stationary frame which allows the cart to be emptied and then reloaded on each cycle.
3. The cycle time is greater than eight seconds, as required in the standard.
4. The cart is loaded with inert material at 3.5 pounds per gallon according to the rated size of the container. The loading material is to occupy at least 70% of the volume of the cart.
5. The cart is positioned in front of the lifting mechanism and is then engaged by the lifter and lifted to empty the cart into a bin. The cart is set down onto a concrete surface and is held stationary as it is reloaded by tipping the bin to allow the weights to re-enter the cart.
6. Inspections are made whenever any change is noticed and after every 100 lifts.
7. Failure is judged to be cracks, holes or other induced defects or deformations in the cart that would prevent the cart's use as a trash cart and be emptied by the automated method

TEST RESULTS:

Cycles	Comments on Performance
520	No significant damage

SUMMARY: The cart passed the ANSI Z245.30-2008 and Z245.60-2008 standards for minimum performance. (Includes cavities 3, 4, and 5 plastic and metal bar)

Sincerely,

Brian A. Barfield, P.E.
bab Structural Engineering Services, PLLC

NORTH CAROLINA PROFESSIONAL SEAL 035798 ENGINEER BRIAN A. BARFIELD

07-15-2015

bab

Structural Engineering Services, PLLC
3017Clark Street Charlotte NC
Phone: 704.507.4014
E-mail: bbarfield@babstruct.com

TESTING REPORT

DATE: 15 July 2015
SUBJECT: Trash carts
PRODUCT IDENTIFICATION: MSD-95E

TEST: **LOADING AND UNLOADING (CYCLE TEST) -AUTOMATED**

TEST DESCRIPTION: The loading and unloading test is designed to approximate the useful life of a cart (10 years) in the actual lifting that is performed when emptying the cart into a semi- automated truck. This test is useful in assessing the overall design (such as the lid fit, handle material and hinge mechanism, wheel assembly strength, etc.) and overall durability.

MINIMUM PERFORMANCE STANDARD: ANSI standard Z245.30-2008 requires that after testing the cart should not suffer any damage or permanent deformation such that it cannot be safely used in normal operation. ANSI Z-245.60-2008 establishes dimensional requirements for the cart.

TEST PROCEDURE (Meets the requirements of ANSI Z245.30-2008):

1. The test is conducted at room temperature.
2. A standard automated lifting mechanism is used. This lifter is compatible with all currently used carts. The lifting mechanism is attached to a stationary frame which allows the cart to be emptied and then reloaded on each cycle.
3. The cycle time is greater than eight seconds, as required in the standard.
4. The cart is loaded with inert material at 3.5 pounds per gallon according to the rated size of the container. The loading material is to occupy at least 70% of the volume of the cart.
5. The cart is positioned in front of the lifting mechanism and is then engaged by the lifter and lifted to empty the cart into a bin. The cart is set down onto a concrete surface and is held stationary as it is reloaded by tipping the bin to allow the weights to re-enter the cart.
6. Inspections are made whenever any change is noticed and after every 100 lifts.
7. Failure is judged to be cracks, holes or other induced defects or deformations in the cart that would prevent the cart's use as a trash cart and be emptied by the automated method.

TEST RESULTS:

Cycles	Comments on Performance
520	No significant damage

SUMMARY: The cart passed the ANSI Z245.30-2008 and Z245.60-2008 standards for minimum performance.

Sincerely,

Blaine A. Barfield, P.E.
bab Structural Engineering Services, PLLC

NORTH CAROLINA PROFESSIONAL SEAL 035798 ENGINEER BLAINE A. BARFIELD

07-15-2015

bab

Structural Engineering Services, PLLC
3017Clark Street Charlotte NC
Phone: 704.507.4014
E-mail: bbarfield@babstruct.com

TESTING REPORT

DATE: 15 July 2015
SUBJECT: Trash carts
PRODUCT IDENTIFICATION: MSD-95E

TEST: **FORCE TO TIP**

TEST DESCRIPTION: To measure the strength required to start container movement to the balance point and to ensure that the force is not greater than an established limit. This force relates to the ease of operation of the cart.

MINIMUM PERFORMANCE STANDARD: According to ANSI Z245.30, the force must not exceed 120pounds force. ANSI Z-245.60 establishes dimensional requirements for the cart.

TEST PROCEDURE (Meets the requirements of ANSI Z245.30):

1. The cart is to be loaded with a standard load. (3.5 pounds of material per gallon of rated capacity. (The load to occupy at least 70% of the capacity of the cart.)
2. The ground to be level and with a smooth horizontal surface having less than a 1E slope.
3. The cart is to be blocked to prevent movement of the wheels.
4. A spring scale or other force-measuring device is attached to the handle of the cart. (The force-measuring device to have an accuracy of less than ±3%.) The cart is then tipped by pulling on the force-measuring device, until the cart is in the balanced position. The angle of pull, that is, the tipping force direction, is to be horizontal with less than ±2E to all sides. (The position where the cart does not tend to move either forward or backward but remains in a balanced position.) The maximum force during the pull is noted.
5. Repeat step 4 so that three determinations are made. These results are averaged.
6. The test is to be conducted at room temperature.

TEST RESULTS:
The tipping forces were as follows: Average = 85 pounds.

SUMMARY: The cart passed the ANSI Z245.30 and Z245.60 standards at or above the minimum requirements.

Sincerely,

Blaine A. Barfield, P.E.
bab Structural Engineering Services, PLLC

NORTH CAROLINA PROFESSIONAL SEAL 035798 ENGINEER BLAINE BARFIELD

7-15-2015

bab

Structural Engineering Services, PLLC
3017Clark Street Charlotte NC
Phone: 704.507.4014
E-mail: bbarfield@babstruct.com

TESTING REPORT

DATE: 15 July 2015
SUBJECT: Trash carts
PRODUCT IDENTIFICATION: MSD-95E

TEST: **VOLUMETRIC LOADING CAPACITY**

TEST DESCRIPTION: To determine the volume of a container

MINIMUM PERFORMANCE STANDARD: The volumetric loading capacity of the container should be measured according to ANSI Z245.30-2008. ANSI 2245.60-2008 establishes dimensional requirements for the cart.

TEST PROCEDURE (Meets the requirements of ANSI Z245.30-2008):

1. The volume of the cart is measured using the tank (immersion) method.
2. The empty cart is placed inside a tank with sufficient capacity to receive the container to be tested. The container must be level (that is, not inclined).
3. Simultaneously fill the tank and the container with water at a standard temperature (59°F).
4. Measure the volume of water inside the container to an accuracy of ±2 percent.
5. Repeat the capacity method and determine the volumetric capacity of the lid.

TEST RESULTS:
The cart had a capacity of 96.7 gallons. The lid had a capacity of 5.6 gallons.

SUMMARY: The cart passed the test at or above minimum requirements as specified in ANSI Z245.30-2008 and Z245.60-2008.

Sincerely,

Blaine A. Barfield, P.E.
bab Structural Engineering Services, PLLC

NORTH CAROLINA PROFESSIONAL SEAL 035798 ENGINEER BLAINE A. BARFIELD

07-15-2015

95 Gallon Edge Roll-Out Cart

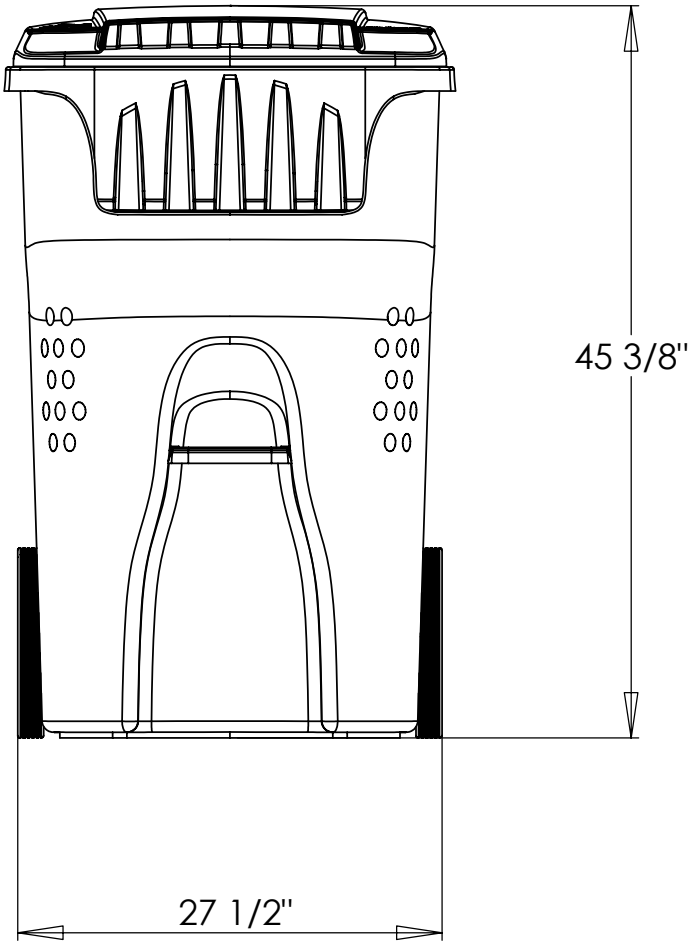

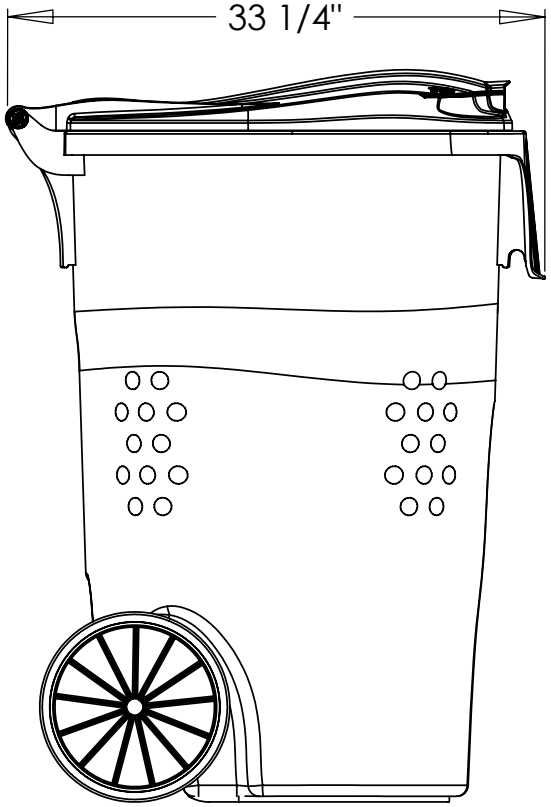

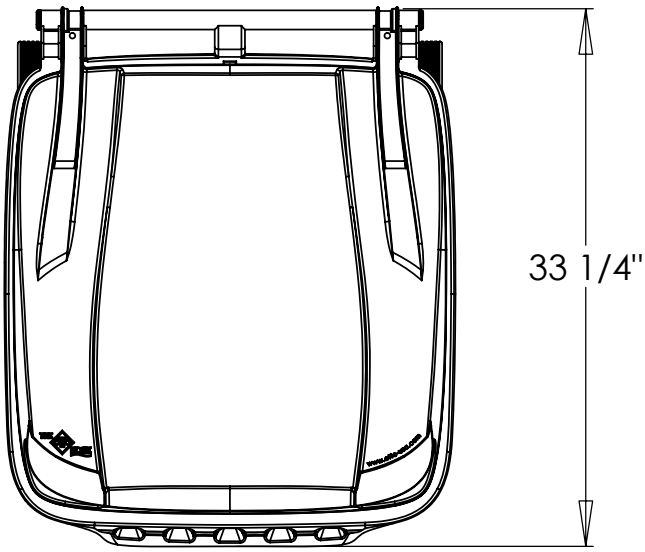

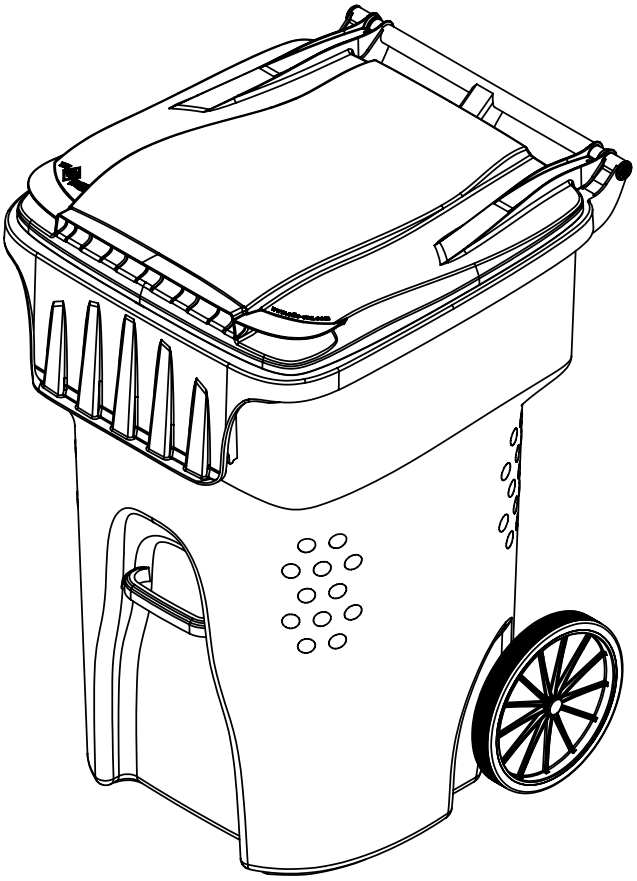

REV. June 2010

This Product is ANSI Compliant

95MILLENIUM

MODEL	Millennium 95G
LOAD RATING	335 lbs
ASSEMBLY WEIGHT	approx. 34.5 lbs
STACKING	10 High
LTL STACKING	8 High
TOTAL QUANTITY (53’ TRUCK)	560

VETERAN OWNED

95MILLENIUM

BUILT FOR TODAY'S COLLECTION NEEDS

Durability increased with "double-pinned" lid attachment

Longevity increased with contoured lid that reduces warp and water entrapment

Unique, contoured body designed for automated lifting equipment

Molded foot access and large handle make maneuvering easier, even with heavy loads in place

Sanitary, easy-open lift lip

Lasts longer with UV resistant plastic for long-term exposure to sunlight

Corrosion-resistant hardware protects and increases durability

Engineered for stability: able to resist tipping and does not blow over – even in 40 mph winds

AVAILABLE COLORS

The Millenium container is available in eight standard colors. Over 80 custom colors available upon request.

68 - Dark Blue | 51 - Light Blue | 56 - Green | 65 - Forest Green

50 - Dark Gray | 57 - Light Gray | 63 - Brown | 60 - Black

YOUR CART YOUR WAY!

Your cart is your billboard; every trash day passersby see your company name. Take the opportunity to stand out from the rest.

At Otto, we work with you to design your carts so you get the most from your investment.

Customize your cart with color logos, lid graphics, or custom color. We can also include serialization, RFID, barcodes, and more.

Make your carts, ***Truly Your Carts.***

Contact your Area Sales Manager to explore your options.

Duramax Holdings LLC dba Otto Environmental Systems
12700 General Drive, Charlotte, North Carolina 28273
800-795-6886 • info@otto-usa.com • otto-usa.com
© Duramax Holdings, LLC dba Otto Environmental Systems

Otto/06012023

MSD-95M “Millennium” Container

The Otto Multi-System Design MSD-95M “Millennium” rollout container consists of injection-molded, high density polyethylene plastic body, hinged lid, two (2) hinge pins, two (2) plastic wheel assemblies, and a solid steel axle.

The Otto MSD-95M rollout refuse container is compatible with fully automated arm lifter systems and standard, semi-automated bar lifter systems.

This container complies with ANSI Z245.30-2008 and ANSI Z245.60-2008 standards for Container Safety and Compatibility Requirements.

VOLUME CAPACITY:

The total actual volume of the Otto MSD-95M container is 99.9 gallons (per ANSI Z245.30-1999, Appendix A, Volumetric Loading Capacity).
Base: 95.8 gal Lid: 4.1 gal

LOAD RATING:

Per the ANSI Z245.30-2008 Standard, the Otto MSD-95M rollout refuse container is capable of accommodating a load of 335 lbs.

WEIGHT:

The completed assembly weight of the Otto MSD-95M container is 34.5 lbs. when equipped with Otto’s 10" injection molded wheels. Other wheel options are available.

DIMENSIONS:

Overall Height: 41.25"
Loading Height: 39.25"
Overall Width: 29.38"
Overall Depth: 33.88"
Minimum Grip Diameter: 28.2"

CONTAINER BODY:

The Otto MSD-95M Container Body is injection-molded from High Density Polyethylene (HDPE). The container body has smooth surfaces both on the interior and exterior. The

© OTTO ENVIRONMENTAL SYSTEMS NORTH AMERICA, INC.

interior is free of crevices and recesses where refuse could become trapped, in order to allow complete emptying. The wall thickness is up to 0.19". The high-density polyethylene has a density of 0.945 to 0.954 grams cm3. The Melt Index (MI) of the HDPE is 3.5 to 6.0.

The top of the container body is reinforced with a rim around its entire perimeter. This feature adds structure and stability to the container and provides a flat surface for the lid to close on. The top of the rim has a rain lip to prevent water from entering the container with the lid closed. The handles are integrally molded into the container body at the top rim. The underside of the rim on the Otto MSD-95M is reinforced with a total of forty (40) integrally molded-in gussets spaced around the entire circumference of the container.

The front of the container has a molded recess that provides for the front “catch,” or lower lift bar. The MSD-95M container is offered with a 1" rotating steel catch bar. The clip-style metal lower lift bar is freely rotating, 1" OD (outside diameter) roll-formed steel with formed ends for added strength. The wall thickness of this bar is .050", hot rolled steel with an iron zinc clear chromate top coat shielding for corrosion protection. The clip-style metal catch bar allows for speedy installation of the bar from the outside of the container without requiring the use of any hand tools. Metal spring clips are compressed during installation and spring back once inside the container for a solid stop once installed.

The bottom of the container has molded-in wear ridges that extend around its perimeter. The wear ridges provide additional protection against abrasive wear if the container is slid on asphalt or pavement and improve impact resistance of the bottom of the container. There is a recessed area molded above the middle of the axle which allows a person’s foot to be placed directly upon the axle to allow the container to be easily tilted, even with a full load.

The inside bottom of the container has a spherically shaped energy absorbing detail, approximately 8" in diameter, integrally molded into its floor. This detail has been engineered to protect the floor of an empty container from impact when being loaded with heavy objects.

The Otto MSD-95M rollout container has an integrally molded front “pouch” to facilitate semi-automated lifting. This upper pouch is reinforced with a pattern of eight (8) internal ribs. These ribs add strength and structure to the lifting pouch and front of the container.

Otto containers are designed for nesting and easy stacking for shipment and storage. Stacking ribs are molded onto the top rim to prevent containers from becoming wedged together during shipment.

The weight of the container body is 24.1 lbs. This weight does not include any other components.

© OTTO ENVIRONMENTAL SYSTEMS NORTH AMERICA, INC.

LID:

The Otto MSD-95M container Lid is injection-molded from HDPE and is attached to the container body using two (2) HDPE snap-lock hinge pins. The lid rotates freely about the hinge a full 270 degrees. The lid, when closed, rests on the top rim of the container body, providing a secure tight fit around the entire perimeter between the lid and base. This prevents rain, insects and vermin from entering the container, as well as preventing the escape of most odors when the lid is closed.

The lid is molded with a hand-hold lip that extends across the full width of the front of the cart and wraps around both corners. This allows the lid to be easily opened from three sides without contact with refuse or residue.

The minimum material thickness in the lid is 0 .120".

The weight of the lid is 4.1 lbs.

HINGE PIN:

The Otto MSD-95M lid Hinge Pins are injection-molded from HDPE. The hinge pins secure the lid to the integrally molded lid hinge and handle detail. Two (2) hinge pins are used to secure the lid. The hinge pins are installed at the factory using a rubber mallet. At installation, the truncated conical end of the hinge pin compresses and snaps into the pocket detail in the handle detail. This prevents vandalism and securely fastens the lid to the container base. The hinge pins can be removed with a special tool available from Otto.

LID HINGE AND HANDLE DETAIL:

The Otto MSD-95M Lid Hinge is integrally molded to the container body. The handle's diameter is 1.0" and provides 1.375" clearance for gloved hands.

AXLE:

The Otto MSD-95M machined solid steel Axle has a 27/32" diameter. The axle is zinc plated to protect against rust and corrosion. The large diameter of the axle allows the container prevents bending which can cause wheel rub and supports a fully loaded container. The axle will withstand a 375-lb. load without permanent deformation. The weight of the axle is 3.9 lbs.

WHEELS:

© OTTO ENVIRONMENTAL SYSTEMS NORTH AMERICA, INC.

The Otto MSD-95M container may be fitted with various 10" Wheels.

	PLASTIC BLOW-MOLDED	SNAP-ON BLOW-MOLDED	CUSHION-TREAD	SOLID RUBBER TIRE	INJECTION MOLDED 10"
Description	HDPE, blow-molded, separate spacers.	HDPE, blow-molded, integrated spacers.	Injection-molded hub (HDPE) with rubberized cushion tread, separate spacers.	Injection-molded hub (HDPE) with pressed-on solid rubber tire, integrated spacers.	Injection-molded hub (HDPE), integrated spacers.
Wheel Diameter	10" diameter	10" diameter	10" diameter	10" diameter	10" diameter
	1.75" width	1.75" width	1.75" width	1.75" width	1.75" width
Load Rating	200 lbs.	200 lbs.	200 lbs.	200 lbs.	200 lbs.
Attachment	Zinc-plated palnut end caps.	Internal “snap-lock” attachment.	Internal “snap-lock” attachment.	Internal spring-loaded steel detent for snap-on.	Internal spring-loaded steel detent for snap-on.
Weight (per wheel assembly)	1.27 lbs. (10")	1.27 lbs. (10")	1.48 lbs. (10")	1.88 lbs. (10")	1.39 lbs. (10")

MARKINGS:

All Otto MSD-95M carts are hot stamped with a unique sequence serial number to facilitate distribution and control. The customer's name or logo can be hot stamped on the container’s lid or body. The containers are permanently marked with the month and year of production, mold number, material identification, patent number, and manufacture’s insignia.

WORKMANSHIP:

The Otto MSD-95M plastic material — high-density polyethylene — is manufactured from virgin raw materials by major petrochemical companies, (e.g., Exxon, Chevron-Phillips, Quantum) and includes no recycled or regenerated plastic or foreign material. Up to 50% recycled material (PCR) content may be available upon request on particular colors, where suitable feedstock is available.

© OTTO ENVIRONMENTAL SYSTEMS NORTH AMERICA, INC.

COLOR:

Otto's standard colors are Dark Blue, Light Blue, Green, Forest Green, Dark Gray, Light Gray, Brown, and Black. Other colors are available to special order.

All injection-molded parts are specifically prepared to be colorfast so that the plastic material does not alter appreciably in normal use. Due to the use of UV (ultraviolet) stable pigment and injection molding process, Otto containers have excellent color fastness.

UV LIGHT STABILIZATION:

The Otto MSD-95M container is stabilized against ultraviolet degradation with not less than 0.3% UV additives. This is a state-of-the-art package that meets or exceeds older systems requiring 0.5% UV additive by weight and provides product viability for a minimum of 10 years of outdoor exposure.

RECYCLABILITY:

The Otto MSD-95M Gallon Container is produced with a fully recyclable thermoplastic High Density Polyethylene (HDPE) resin. This allows the material to be recycled and reused after the useful life of the container

QUALITY ASSURANCE PROCEDURES AND PERFORMANCE TESTING:

The Otto MSD-95M Container is designed to withstand the following series of performance tests. The performance test requirements were designed to simulate the type of situations encountered in actual use. The severity of some tests was scaled to anticipate an expected 10-year life.

Test Description	Test Requirements
Semi-Automated Lifter Life Cycle	ANSI Z245.30-2008
Fully-Automated Lifter Life Cycle	ANSI Z245.30-2008
Drop Test (335 Lb. @ 12 Feet)	10 Drops without Damage
Wind Test	See 3rd party wind resistance testing
Axle Durability (Bend) Test	ANSI Z245.30-2008
Durability During Pulling Test	ANSI Z245.30-2008

© OTTO ENVIRONMENTAL SYSTEMS NORTH AMERICA, INC.

The following Quality Assurance tests are performed according to ASTM procedures.

Material Testing

1. Melt Flow Index Test: To check that the polymer batch matches the supplier certification. This is testing procedure ASTM D1238.
2. Colorant Color Match: Compare lot based color chips to the color chip master to ensure consistency.

In-Process Quality Tests

1. Drop Test: Cart is raised 12' under load and dropped 4 consecutive times. This provides that there is not a processing issue.
    a. 95 gallon- 335lbs
2. Bib Pull Test: Bib pulled to failure to evaluate brittleness. Bib should break tensile.
3. Bar Pull Test: Bar pulled to failure. Determines if there is weakness at knit line at center of plastic bar. Bar should break off center.
4. Fit Checks: Mating components (axle, lift bar, lid) installed onto carts after cooled to ensure proper fit, form & function.
5. Weight & Thickness Checks: Evaluates molding process.

All designs, specifications, and components are subject to change at the manufacturer's sole discretion at any time without notice. Data published herein is informational in nature and shall not be construed to warranty suitability of the unit for any particular purpose as performance may vary with the conditions encountered.

© OTTO ENVIRONMENTAL SYSTEMS NORTH AMERICA, INC.

OTTO MILLENNIUM SERIES

972, 973, 975, 976
95 GALLON

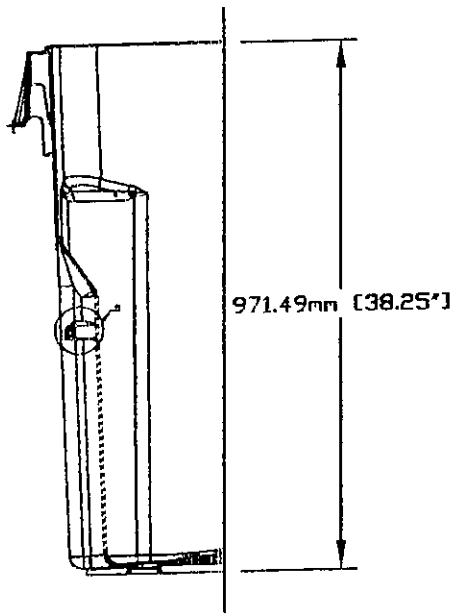

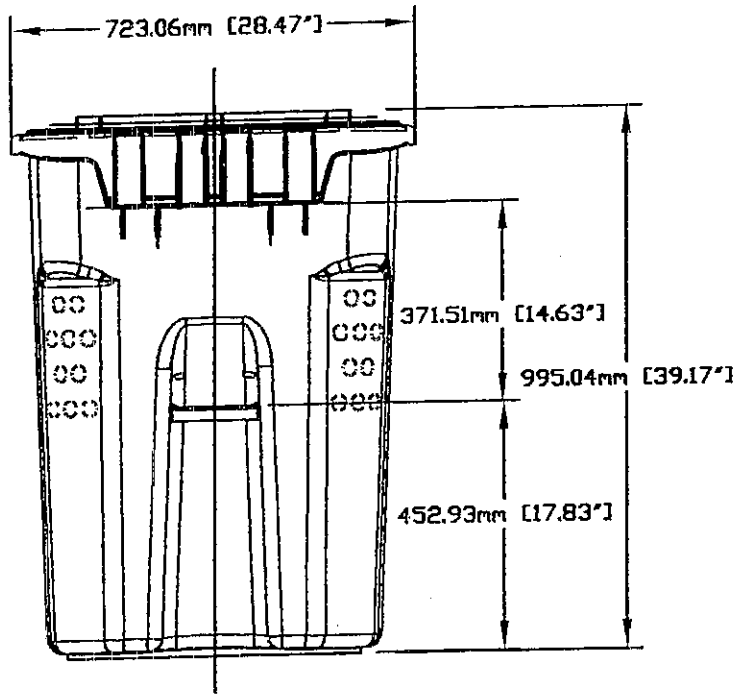

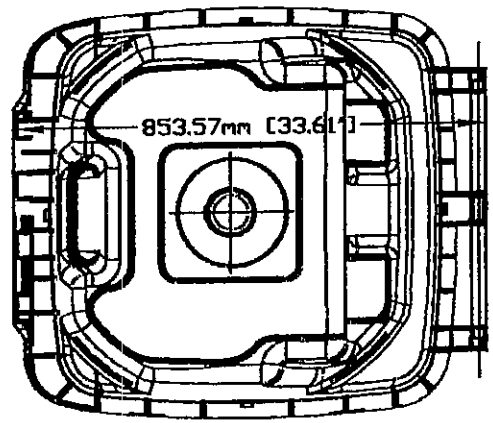

**** FOR REFERENCE ONLY ****

8/30/02
REV 1
BY TIM O'HARE

TESTING REPORT

DATE: 26 July 2007
SUBJECT: Trash carts
PRODUCT IDENTIFICATION: MSD-95M

TEST: **WIND TUNNEL**

TEST DESCRIPTION: This test is a measure of the stability of the cart in a high wind. Although not specifically tied to the basic purpose of the cart, most consumers would object to a cart that often tipped over and spilled the contents.

MINIMUM PERFORMANCE STANDARD: The specification varies from site to site depending upon prevalent wind conditions, etc. Most manufacturers expect the cart to be stable up to at least 30 mph.

TEST PROCEDURE:

1. A large wind tunnel with a 54 inch diameter exit opening is used for the test. The wind was supplied by a Gates Super HC drive.
2. Position the cart 48 inches from the end of the exit opening. (Beyond stagnant air zone.)
3. The bottom of the cart is to be level with the exit opening and is to rest on a concrete surface that has a surface texture similar to a roadway.
4. The bottom of the cart is placed against a 6 inch brace (like a curb) to prevent the cart from rolling or sliding.
5. The wind velocity is raised until the cart starts to move. This wind speed is measured using a certified volometer.
6. Measure the air velocity to tip the cart, either free-standing or against the curb if it has rolled or slid.
7. Test cart in three orientations toward the wind tunnel opening – front, side and back.
8. The procedure was performed using a blow-molded wheel and then repeated using an injection molded wheel with rubber tread.

TEST RESULTS:

Test	Orientation Towards Wind Tunnel		
	Front	Side	Back
Wind speed to tip the cart	47 mph	56 mph	57 mph

SUMMARY: The cart was stable in moderate to high winds.

A. Brent Strong
Professor, Manufacturing Engineering
Brigham Young University
265 CTB, Provo, UT 84602

bab

Structural Engineering Services, PLLC
3017Clark Street Charlotte NC
Phone: 704.507.4014
E-mail: bbarfield@babstruct.com

TESTING REPORT

DATE: 15 July 2015
SUBJECT: Trash carts
PRODUCT IDENTIFICATION: MSD-95M

TEST: **SLOPE STABILITY**

TEST DESCRIPTION: This test checks the static stability of an empty and loaded cart on a defined slope (5 degrees).

MINIMUM PERFORMANCE STANDARD: ANSI Z245.30 requires that the cart must stand, without tipping or moving, in three different orientations on a defined slope. ANSI Z245.60 establishes dimensional requirements for the cart.

TEST PROCEDURE (Meets the requirements of ANSI Z245.30):

1. Prepare a ramp with a slope of 5 degrees. The ramp must be of sufficient size that a cart can be moved onto the cart with no portion of the cart overhanging the edges of the ramp.
2. There is to be no wind.
3. Move an empty cart onto the ramp and orient the cart with the front of the cart facing up the ramp. Note any tipping or movement. Tum the cart so that the front of the cart is facing sideways on the ramp. Note any tipping or movement. Tum the cart so that the front of the cart is facing down the ramp. Note any tipping or movement.
4. Repeat step two with the cart loaded to the standard loading as specified in the ANSI standard. The loading material to occupy at least 70% of the capacity of the cart.

TEST RESULTS:

	Orientation	Result
Empty	Front facing upward	Stable
	Front facing sideways (right)	Stable
	Front facing sideways (left)	Stable
	Front facing downward	Stable
Filled (loaded lbs)	Front facing upward	Stable
	Front facing sideways (right)	Stable
	Front facing sideways (left)	Stable
	Front facing downward	Stable

SUMMARY: The cart passed the ANSI Z245.30 and Z245.60 standards since non-movement in three orientations is met.

Sincerely,

Blaine A. Barfield, P.E.

bab Structural Engineering Services, PLLC

NORTH CAROLINA PROFESSIONAL SEAL 035798 ENGINEER BLAINE A. BARFIELD

07/15/2015

bab

Structural Engineering Services, PLLC
3017Clark Street Charlotte NC
Phone: 704.507.4014
E-mail: bbarfield@babstruct.com

TESTING REPORT

DATE: 15 July 2015
SUBJECT: Trash carts
PRODUCT IDENTIFICATION: MSD-95M

TEST: **LIDTEST**

TEST DESCRIPTION: To determine if a container lid will sustain the weight of an average child (approximately 80 pounds) without collapsing into the container.

MINIMUM PERFORMANCE STANDARD: According to ANSI Z245.30, the lid of the cart must withstand a load of 80 pounds without collapsing or allowing the loading weight to fall into the container. ANSI Z-245.60 establishes dimensional requirements for the cart.

TEST PROCEDURE (Meets the requirements of ANSI Z245.30):

1. The cart is placed on a smooth, level, horizontal surface.
2. A weight of 80 pounds with a surface area diameter round of 8 inches is placed on the lid of the cart.
3. The test is to be conducted at room temperature.

TEST RESULTS:

The lid did not collapse or excessively deflect during the test.

SUMMARY: The cart passed the test at or above minimum requirements as specified in ANSI Z245.30 and Z245.60.

Sincerely,

Blaine A. Barfield, P.E.
bab Structural Engineering Services, PLLC

NORTH CAROLINA PROFESSIONAL SEAL 035798 ENGINEER BLAINE A. BARFIELD

7-15-2015

bab

Structural Engineering Services, PLLC
3017Clark Street Charlotte NC
Phone: 704.507.4014
E-mail: bbarfield@babstruct.com

TESTING REPORT

DATE: 15 July 2015
SUBJECT: Trash carts
PRODUCT IDENTIFICATION: MSD-95M (10-inch wheels)

TEST: **DURABILITY DURING PULLING (CURB TEST)**

TEST DESCRIPTION: This test determines whether the cart's handles, wheels, and axles will withstand the repeated pulling forces experienced during normal 10-year useful life.

MINIMUM PERFORMANCE STANDARD: The ANSI standanrL245.30-2008 requires that after testing the handles, wheels, axles, their attachments to the container, and the container itself must remain functional. ANSI 2245.60-2008 establishes dimensional requirements for the cart.

TEST PROCEDURE (Meets the requirements of ANSI 2245.30-2008):

1. The cart is loaded with a standard load (according to the ANSI standard) with the volume of material occupying at least 70% of the total capacity of the cart. (The actual weight was 350 pounds.)
2. Using the cart's handles, the loaded cart is pushed off a curb. The curb height was 5.5 inches. The cart is then repositioned at the top of the curb. The test is repeated for 520 cycles (drops).
3. Using the cart's handles, an unloaded (empty) cart is pulled up a curb. The curb height was 5.5 inches. The cart is repositioned at the bottom of the curb. The test is repeated 520 cycles (lifts).
4. The carts are set down onto a concrete surface.
5. The temperature to be normal room temperature (73 degrees F).

TEST RESULTS

Test Condition	Result
Push off of full cart	No significant damage
Pull up of empty cart	No significant damage

SUMMARY: The cart passed the ANSI 2245.30-2008 and 2245.60-2008 standards for minimum performance.

Sincerely,

Blaine A. Barfield, P.E.
bab Structural Engineering Services, PLLC

NORTH CAROLINA PROFESSIONAL SEAL 035798 ENGINEER BLAINE A. BARFIELD

07-15-2015

bab

Structural Engineering Services, PLLC
3017Clark Street Charlotte NC
Phone: 704.507.4014
E-mail: bbarfield@babstruct.com

TESTING REPORT

DATE: 15 July 2015
SUBJECT: Trash carts
PRODUCT IDENTIFICATION: MSD-95M

TEST: **DURABILITY DURING PULLING (CURB TEST)**

TEST DESCRIPTION: This test determines whether the cart's handles, wheels, and axles will withstand the repeated pulling forces experienced during normal 10-year useful life.

MINIMUM PERFORMANCE STANDARD: The ANSI standard Z245.30-2008 requires that after testing the handles, wheels, axles, their attachments to the container, and the container itself must remain functional. ANSI Z245.60-2008 establishes dimensional requirements for the cart.

TEST PROCEDURE (Meets the requirements of ANSI Z245.30-2008):

1. The cart is loaded with a standard load (according to the ANSI standard) with the volume of material occupying at least 70% of the total capacity of the cart. (The actual weight was 350 pounds.)
2. Using the cart's handles, the loaded cart is pushed off a curb. The curb height was 5.5 inches. The cart is then repositioned at the top of the curb. The test is repeated for 520 cycles (drops).
3. Using the cart's handles, an unloaded (empty) cart is pulled up a curb. The curb height was 5.5 inches. The cart is repositioned at the bottom of the curb. The test is repeated 520 cycles (lifts).
4. The carts are set down onto a concrete surface.
5. The temperature to be normal room temperature (73 degrees F).

TEST RESULTS:

Test Condition	Result
Push off of full cart	No significant damage.
Pull up of empty cart	No significant damage

SUMMARY: The cart passed the ANSI Z245.30-2008 and Z245.60-2008 standards for minimum performance.

Sincerely,

Blaine A. Barfield, P.E.
bab Structural Engineering Services, PLLC

NORTH CAROLINA PROFESSIONAL SEAL 035798 ENGINEER BLAINE A. BARFIELD

07-15-2015

bab

Structural Engineering Services, PLLC
3017Clark Street Charlotte NC
Phone: 704.507.4014
E-mail: bbarfield@babstruct.com

TESTING REPORT

DATE: 15 July 2015
SUBJECT: Trash carts
PRODUCT IDENTIFICATION: MSD-95M

TEST: **CENTER OF BALANCE POSITION**

TEST DESCRIPTION: To determine the height of the handle of a two-wheeled container at the center-of-balance position. This height affects the ease of operation of the cart.

MINIMUM PERFORMANCE STANDARD: According to the ANSI standard Z245.30, when in the center-of-balance position, the minimum height is to be 29 inches. The maximum height is to be 40 inches when in the center-of-balance position. ANSI Z245.60 establishes dimensional requirements for the cart.

TEST PROCEDURE (Meets the requirements of ANSI Z245.30):

1. The cart is loaded with a standard load (3.5 pounds per gallon of rated capacity with the load occupying at least 70% of the capacity) or with the maximum rated load.
2. The test to be conducted on a hard, flat surface.
3. Block the wheels so that the cart will not roll.
4. Tip the cart slowly, rotating the cart on the wheels, to the center balance position. This position is determined as the position where the cart has a tendency to remain in a balanced (neutral) position, not tipping forward or backward.
5. When in the center balance position, place blocks under the container to maintain in balanced position.
6. Measure the distance vertically from the ground plane to the center line of the handle of the cart. The accuracy of measurement is to be ±0.25 inches.
7. Repeat steps 4, 5 and 6 and then average the results for the three determinations.

TEST RESULTS:
The results are: Average = 34.0 inches

SUMMARY: The cart passed the ANSI Z245.30 and Z245.60 standards.

Sincerely,

Blaine A. Barfield, P.E.
bab Structural Engineering
Services, PLLC

NORTH CAROLINA PROFESSIONAL SEAL 035798 ENGINEER BLAINE A. BARFIELD

07-15-2015

bab

Structural Engineering Services, PLLC
3017Clark Street Charlotte NC
Phone: 704.507.4014
E-mail: bbarfield@babstruct.com

TESTING REPORT

DATE: 15 July 2015
SUBJECT: Trash carts
PRODUCT IDENTIFICATION: MSD-95M

TEST: **LOADING AND UNLOADING (CYCLE TEST)-SEMI-AUTOMATED**

TEST DESCRIPTION: The loading and unloading test is designed to approximate the useful life of a cart (10 years) in the actual lifting that is performed when emptying the cart into a semi- automated truck. This test is useful in assessing the overall design (such as the lid fit, handle material and hinge mechanism, wheel assembly strength, etc.) and overall durability.

MINIMUM PERFORMANCE STANDARD: ANSI standard Z245.30-2008 requires that after testing the cart should not suffer any damage or permanent deformation such that it cannot be safely used in normal operation. ANSI Z-245.60-2008 establishes dimensional requirements for the cart.

TEST PROCEDURE (Meets the requirements of ANSI Z245.30-2008):

1. The test is conducted at room temperature.
2. A standard semi-automated lifting mechanism is used. This lifter is compatible with all currently used carts. The lifting mechanism is attached to a stationary frame which allows the cart to be emptied and then reloaded on each cycle.
3. The cycle time is greater than eight seconds, as required in the standard.
4. The cart is loaded with inert material at 3.5 pounds per gallon according to the rated size of the container. The loading material is to occupy at least 70% of the volume of the cart.
5. The cart is positioned in front of the lifting mechanism and is then engaged by the lifter and lifted to empty the cart into a bin. The cart is set down onto a concrete surface and is held stationary as it is reloaded by tipping the bin to allow the weights to re-enter the cart.
6. Inspections are made whenever any change is noticed and after every 100 lifts.
7. Failure is judged to be cracks, holes or other induced defects or deformations in the cart that would prevent the cart's use as a trash cart and be emptied by the automated method

TEST RESULTS:

Cycles	Comments on Performance
520	No significant damage

SUMMARY: The cart passed the ANSI Z245.30-2008 and Z245.60-2008 standards for minimum performance. (Includes cavities 3, 4, and 5 plastic and metal bar)

Sincerely,

Blaine A. Barfield, P.E.
bab Structural Engineering Services, PLLC

NORTH CAROLINA PROFESSIONAL SEAL 035798 ENGINEER BLAINE A. BARFIELD

07-15-2015

bab

Structural Engineering Services, PLLC
3017Clark Street Charlotte NC
Phone: 704.507.4014
E-mail: bbarfield@babstruct.com

TESTING REPORT

DATE: 15 July 2015
SUBJECT: Trash carts
PRODUCT IDENTIFICATION: MSD-95M

TEST: **LOADING AND UNLOADING (CYCLE TEST) -AUTOMATED**

TEST DESCRIPTION: The loading and unloading test is designed to approximate the useful life of a cart (10 years) in the actual lifting that is performed when emptying the cart into a semi- automated truck. This test is useful in assessing the overall design (such as the lid fit, handle material and hinge mechanism, wheel assembly strength, etc.) and overall durability.

MINIMUM PERFORMANCE STANDARD: ANSI standard Z245.30-2008 requires that after testing the cart should not suffer any damage or permanent deformation such that it cannot be safely used in normal operation. ANSI Z-245.60-2008 establishes dimensional requirements for the cart.

TEST PROCEDURE (Meets the requirements of ANSI Z245.30-2008):

1. The test is conducted at room temperature.
2. A standard automated lifting mechanism is used. This lifter is compatible with all currently used carts. The lifting mechanism is attached to a stationary frame which allows the cart to be emptied and then reloaded on each cycle.
3. The cycle time is greater than eight seconds, as required in the standard.
4. The cart is loaded with inert material at 3.5 pounds per gallon according to the rated size of the container. The loading material is to occupy at least 70% of the volume of the cart.
5. The cart is positioned in front of the lifting mechanism and is then engaged by the lifter and lifted to empty the cart into a bin. The cart is set down onto a concrete surface and is held stationary as it is reloaded by tipping the bin to allow the weights to re-enter the cart.
6. Inspections are made whenever any change is noticed and after every 100 lifts.
7. Failure is judged to be cracks, holes or other induced defects or deformations in the cart that would prevent the cart's use as a trash cart and be emptied by the automated method.

TEST RESULTS:

Cycles	Comments on Performance
520	No significant damage

SUMMARY: The cart passed the ANSI Z245.30-2008 and Z245.60-2008 standards for minimum performance.

Sincerely,

Blaine A. Barfield, P.E.
bab Structural Engineering Services, PLLC

NORTH CAROLINA PROFESSIONAL SEAL 035798 ENGINEER BLAINE A. BARFIELD

07-15-2015

bab

Structural Engineering Services, PLLC
3017Clark Street Charlotte NC
Phone: 704.507.4014
E-mail: bbarfield@babstruct.com

TESTING REPORT

DATE: 15 July 2015
SUBJECT: Trash carts
PRODUCT IDENTIFICATION: MSD-95M

TEST: **FORCE TO TIP**

TEST DESCRIPTION: To measure the strength required to start container movement to the balance point and to ensure that the force is not greater than an established limit. This force relates to the ease of operation of the cart.

MINIMUM PERFORMANCE STANDARD: According to ANSI Z245.30, the force must not exceed 120pounds force. ANSI Z-245.60 establishes dimensional requirements for the cart.

TEST PROCEDURE (Meets the requirements of ANSI Z245.30):

1. The cart is to be loaded with a standard load. (3.5 pounds of material per gallon of rated capacity. (The load to occupy at least 70% of the capacity of the cart.)
2. The ground to be level and with a smooth horizontal surface having less than a 1E slope.
3. The cart is to be blocked to prevent movement of the wheels.
4. A spring scale or other force-measuring device is attached to the handle of the cart. (The force-measuring device to have an accuracy of less than ±3%.) The cart is then tipped by pulling on the force-measuring device, until the cart is in the balanced position. The angle of pull, that is, the tipping force direction, is to be horizontal with less than ±2E to all sides. (The position where the cart does not tend to move either forward or backward but remains in a balanced position.) The maximum force during the pull is noted.
5. Repeat step 4 so that three determinations are made. These results are averaged.
6. The test is to be conducted at room temperature.

TEST RESULTS:
The tipping forces were as follows: Average = 72 pounds.

SUMMARY: The cart passed the ANSI Z245.30 and Z245.60 standards at or above the minimum requirements.

Sincerely,

Blaine A. Barfield, P.E.
bab Structural Engineering Services, PLLC

NORTH CAROLINA PROFESSIONAL SEAL 035798 ENGINEER BLAINE A. BARFIELD

07/15/2015

bab

Structural Engineering Services, PLLC
3017Clark Street Charlotte NC
Phone: 704.507.4014
E-mail: bbarfield@babstruct.com

TESTING REPORT

DATE: 15 July 2015
SUBJECT: Trash carts
PRODUCT IDENTIFICATION: MSD-95M

TEST: **VOLUMETRIC LOADING CAPACITY**

TEST DESCRIPTION: To determine the volume of a container

MINIMUM PERFORMANCE STANDARD: The volumetric loading capacity of the container should be measured according to ANSI Z245.30-2008. ANSI 2245.60-2008 establishes dimensional requirements for the cart.

TEST PROCEDURE (Meets the requirements of ANSI Z245.30-2008):

1. The volume of the cart is measured using the tank (immersion) method.
2. The empty cart is placed inside a tank with sufficient capacity to receive the container to be tested. The container must be level (that is, not inclined).
3. Simultaneously fill the tank and the container with water at a standard temperature (59°F).
4. Measure the volume of water inside the container to an accuracy of ±2 percent.
5. Repeat the capacity method and determine the volumetric capacity of the lid.

TEST RESULTS:
The cart had a capacity of 95.8 gallons. The lid had a capacity of 4.1 gallons.

SUMMARY: The cart passed the test at or above minimum requirements as specified in ANSI Z245.30-2008 and Z245.60-2008.

Sincerely,

Blaine A. Barfield, P.E.
bab Structural Engineering Services, PLLC

NORTH CAROLINA PROFESSIONAL SEAL 035798 ENGINEER BLAINE A. BARFIELD

7/15/2015

65EDGE

MODEL	Edge 65G
LOAD RATING	230 lbs
ASSEMBLY WEIGHT	approx. 29.5 lbs
STACKING	9 High
LTL STACKING	8 High
TOTAL QUANTITY (53’ TRUCK)	720

VETERAN OWNED

65EDGE

BUILT FOR TODAY'S COLLECTION NEEDS

Durability increased with "double-pinned" lid attachment

Longevity increased with contoured lid that reduces warp and water entrapment

Molded foot access and large handle make maneuvering easier, even with heavy loads in place

Sanitary, easy-open lift lip

Lasts longer with UV resistant plastic for long-term exposure to sunlight

Corrosion-resistant hardware protects and increases durability

Unique, contoured body designed for automated lifting equipment

AVAILABLE COLORS

The Edge container is available in eight standard colors. Over 80 custom colors available upon request.

68 - Dark Blue | 51 - Light Blue | 56 - Green | 65 - Forest Green

50 - Dark Gray | 57 - Light Gray | 63 - Brown | 60 - Black

YOUR CART YOUR WAY!

Your cart is your billboard; every trash day passersby see your company name. Take the opportunity to stand out from the rest.

At Otto, we work with you to design your carts so you get the most from your investment.

Customize your cart with color logos, lid graphics, or custom color. We can also include serialization, RFID, barcodes, and more.

Make your carts, ***Truly Your Carts.***

Contact your Area Sales Manager to explore your options.

Duramax Holdings LLC dba Otto Environmental Systems
12700 General Drive, Charlotte, North Carolina 28273
800-795-6886 • info@otto-usa.com • otto-usa.com
© Duramax Holdings, LLC dba Otto Environmental Systems

Otto/06012023

MSD-65E "Edge" Container

The Otto Multi-System Design MSD-65E "Edge" rollout container consists of injection-molded, high density polyethylene plastic body, hinged lid, two (2) hinge pins, two (2) plastic wheel assemblies, and a solid steel axle.

The MSD-65E rollout refuse container is compatible with fully automated arm lifter systems and standard, semi-automated bar lifter systems.

This container complies with ANSI Z245.30-2008 and ANSI Z245.60-2008 standards for Container Safety and Compatibility Requirements.

VOLUME CAPACITY:

The total actual volume of the Otto MSD-65E container is 67.1 gallons (per ANSI Z245.30-2008, Appendix A, Volumetric Loading Capacity).
Base: 65.1 gal Lid: 2 gal

LOAD RATING:

Per the ANSI Z245.30-2008 Standard, the Otto MSD-65E rollout refuse container is capable of accommodating a load of 230 lbs.

WEIGHT:

The completed assembly weight of the Otto MSD-65E container is 29.5 lbs. when equipped with Otto's 10" injection molded wheels. Other wheel options are als o available.

DIMENSIONS:

Overall Height: 42.38"
Loading Height: 39.1"
Overall Width: 25.13"
Overall Depth: 29.50"
Minimum Grip Diameter: 24.0"

© OTTO ENVIRONMENTAL SYSTEMS NORTH AMERICA, INC.

CONTAINER BODY:

The Otto MSD-65E Container Body is injection-molded from High Density Polyethylene (HDPE). The container body has smooth surfaces both on the interior and exterior. The interior is free of crevices and recesses where refuse could become trapped, in order to allow complete emptying. The average wall thickness is up to 0.19" on the container sidewalls and up to 0.19" on the bottom section. The high-density polyethylene has a density of 0.945 to 0.954 grams cm3. The Melt Index (MI) of the HDPE is 3.5 to 6.0.

The top of the container body is reinforced with a rim around its entire perimeter. This feature adds structure and stability to the Otto MSD-65E container and provides a flat surface for the lid to close on. The top of the rim has a rain lip to prevent water from entering the container with the lid closed. The handles are integrally molded into the container body at the top rim. The underside of the rim is reinforced with a total of thirty-one (31) integrally molded-in gussets/ribs spaced around the entire circumference of the container.

The front of the container has a molded recess that provides for the front “catch,” or lower lift, bar. The Otto MSD-65E container is offered with either an integrally molded plastic front catch bar or a 1" rotating steel catch bar. Both the steel bar and plastic bar versions are nestable with this feature fully installed/integrated. The plastic lower catch bar is integrally molded into the container base in the front recess. Plastic bar containers have no openings into the container bodies.

The clip-style metal catch bar is freely rotating, 1" OD (outside diameter) roll-formed steel with formed ends for added strength. The wall thickness of this bar is .050", hot rolled steel with an iron zinc clear chromate top coat shielding for corrosion protection. The clip-style metal catch bar allows for speedy installation of the bar from the outside of the container without requiring the use of any hand tools. Metal spring clips are compressed during installation and spring back once inside the container for a solid stop once installed.

The bottom of the container has molded-in wear ridges that extend around its perimeter. The wear ridges provide additional protection against abrasive wear if the container is slid on asphalt or pavement and improve impact resistance of the bottom of the container. There is a recessed area molded above the middle of the axle which allows a person’s foot to be placed directly upon the axle to allow the container to be easily tilted, even with a full load.

The inside bottom of the container has a cylindrical-shaped energy absorbing detail, approximately 4.5" in diameter, integrally molded into its floor. This detail has been engineered to protect the floor of an empty container from impact when being loaded with heavy objects.

The Otto MSD-65E rollout container has an integrally molded front “pouch” to facilitate semi-automated lifting. The front wall of the pouch has eleven (11) corrugations in order

© OTTO ENVIRONMENTAL SYSTEMS NORTH AMERICA, INC.

MSD-65E "Edge" Container

The Otto Multi-System Design MSD-65E "Edge" rollout container consists of injection-molded, high density polyethylene plastic body, hinged lid, two (2) hinge pins, two (2) plastic wheel assemblies, and a solid steel axle.

The MSD-65E rollout refuse container is compatible with fully automated arm lifter systems and standard, semi-automated bar lifter systems.

This container complies with ANSI Z245.30-2008 and ANSI Z245.60-2008 standards for Container Safety and Compatibility Requirements.

VOLUME CAPACITY:

The total actual volume of the Otto MSD-65E container is 67.1 gallons (per ANSI Z245.30-2008, Appendix A, Volumetric Loading Capacity).
Base: 65.1 gal Lid: 2 gal

LOAD RATING:

Per the ANSI Z245.30-2008 Standard, the Otto MSD-65E rollout refuse container is capable of accommodating a load of 230 lbs.

WEIGHT:

The completed assembly weight of the Otto MSD-65E container is 29.5 lbs. when equipped with Otto's 10" injection molded wheels. Other wheel options are als o available.

DIMENSIONS:

Overall Height: 42.38"
Loading Height: 39.1"
Overall Width: 25.13"
Overall Depth: 29.50"
Minimum Grip Diameter: 24.0"

© OTTO ENVIRONMENTAL SYSTEMS NORTH AMERICA, INC.

CONTAINER BODY:

The Otto MSD-65E Container Body is injection-molded from High Density Polyethylene (HDPE). The container body has smooth surfaces both on the interior and exterior. The interior is free of crevices and recesses where refuse could become trapped, in order to allow complete emptying. The average wall thickness is up to 0.19" on the container sidewalls and up to 0.19" on the bottom section. The high-density polyethylene has a density of 0.945 to 0.954 grams cm3. The Melt Index (MI) of the HDPE is 3.5 to 6.0.

The top of the container body is reinforced with a rim around its entire perimeter. This feature adds structure and stability to the Otto MSD-65E container and provides a flat surface for the lid to close on. The top of the rim has a rain lip to prevent water from entering the container with the lid closed. The handles are integrally molded into the container body at the top rim. The underside of the rim is reinforced with a total of thirty-one (31) integrally molded-in gussets/ribs spaced around the entire circumference of the container.

The front of the container has a molded recess that provides for the front “catch,” or lower lift, bar. The Otto MSD-65E container is offered with either an integrally molded plastic front catch bar or a 1" rotating steel catch bar. Both the steel bar and plastic bar versions are nestable with this feature fully installed/integrated. The plastic lower catch bar is integrally molded into the container base in the front recess. Plastic bar containers have no openings into the container bodies.

The clip-style metal catch bar is freely rotating, 1" OD (outside diameter) roll-formed steel with formed ends for added strength. The wall thickness of this bar is .050", hot rolled steel with an iron zinc clear chromate top coat shielding for corrosion protection. The clip-style metal catch bar allows for speedy installation of the bar from the outside of the container without requiring the use of any hand tools. Metal spring clips are compressed during installation and spring back once inside the container for a solid stop once installed.

The bottom of the container has molded-in wear ridges that extend around its perimeter. The wear ridges provide additional protection against abrasive wear if the container is slid on asphalt or pavement and improve impact resistance of the bottom of the container. There is a recessed area molded above the middle of the axle which allows a person’s foot to be placed directly upon the axle to allow the container to be easily tilted, even with a full load.

The inside bottom of the container has a cylindrical-shaped energy absorbing detail, approximately 4.5" in diameter, integrally molded into its floor. This detail has been engineered to protect the floor of an empty container from impact when being loaded with heavy objects.

The Otto MSD-65E rollout container has an integrally molded front “pouch” to facilitate semi-automated lifting. The front wall of the pouch has eleven (11) corrugations in order

© OTTO ENVIRONMENTAL SYSTEMS NORTH AMERICA, INC.

to support the lifting platform under maximum load lifting forces. This upper pouch is reinforced with a pattern of eight (8) internal ribs. These ribs add strength and structure to the lifting pouch and front of the container.

Otto containers are designed for nesting and easy stacking for shipment and storage. Stacking ribs are molded onto the exterior of the top rim to prevent containers from becoming wedged together during shipment.

The weight of the container body is approximately 19.3 lbs. This weight does not include any other components.

LID:

The Otto MSD-65E container Lid is injection- molded from HDPE and is attached to the container body using two HDPE snap-lock hinge pins. The lid rotates freely about the hinge a full 270 degrees. The lid, when closed, rests on the top rim of the container body, providing a secure, tight fit around the entire perimeter between the lid and base. This prevents rain, insects and vermin from entering the container, as well as preventing the escape of most odors when the lid is closed.

The lid is molded with a hand-hold lip that extends across the full width of the front of the lid, and wraps around both corners. This allows the lid to be easily opened from three sides without contact with refuse or residue.

The Otto MSD-65E lid attachments are cylindrical-shaped and double-ribbed, creating an extremely robust attachment to the container body. The locking mechanism for the lid hinge pin, which is inserted into the attachments, is retained beneath a molded-in step feature within the lid.

The minimum material thickness in the lid is 0.10".

The weight of the lid is approximately 2.9 lbs.

HINGE PIN:

The Otto MSD-65E lid Hinge Pins are injection-molded from HDPE. The hinge pins secure the lid to the integrally molded lid hinge and handle detail. Two (2) hinge pins are used to secure the lid. The hinge pins are installed at the factory using a rubber mallet. At installation, the truncated conical center portion of the hinge pin compresses and snaps into the open slot in each side of the handle detail. This prevents vandalism and securely fastens the lid to the container base. The hinge pins can be removed with a special tool available from Otto.

© OTTO ENVIRONMENTAL SYSTEMS NORTH AMERICA, INC.

LID HINGE AND HANDLE DETAIL:

The Otto MSD-65E Lid Hinge is integrally molded to the container body and lid. The handle diameter is 1.2" and provides 1.87" clearance for gloved hands.

AXLE:

The Otto MSD-65E machined solid steel Axle has a 27/32" diameter. The axle is zinc plated to protect against rust and corrosion. The large diameter of the axle allows the container to be easily rolled on any surface and supports a fully loaded container. The axle will withstand a 260-lb. load without permanent deformation. The weight of the axle is 3.5 lb.

WHEELS:

The Otto MSD-65E container may be fitted with various 10" Wheels.

	Plastic Blow-molded	**Snap-on Blow-molded**	**Cushion-Tread**	**Solid Rubber Tire**	**Injection Molded 10"**
Description	HDPE, blow-molded, separate spacers.	HDPE, blow-molded, integrated spacers.	Injection-molded hub (HDPE) with rubberized cushion tread, separate spacers.	Injection-molded hub (HDPE) with pressed-on solid rubber tire, integrated spacers.	Injection-molded hub (HDPE), integrated spacers.
Wheel Diameter	10" diameter	10" diameter	10" diameter	10" diameter	10" diameter
	1.75" width	1.75" width	1.75" width	1.75" width	1.75" width
Load Rating	200 lbs.	200 lbs.	200 lbs.	200 lbs.	200 lbs.
Attachment	Zinc-plated palnut end caps.	Internal “snap-lock” attachment.	Internal “snap-lock” attachment.	Internal spring-loaded steel detent for snap-on.	Internal spring-loaded steel detent for snap-on.
Weight (per wheel assembly)	1.27 lbs. (10")	1.27 lbs. (10")	1.48 lbs.(10")	1.88 lbs. (10")	1.39 lbs. (10")

MARKINGS:

© OTTO ENVIRONMENTAL SYSTEMS NORTH AMERICA, INC.

All Otto MSD-65E carts are hot stamped with a unique sequenced serial number to facilitate distribution and control. The customer's name or logo can be hot stamped on the container's body or lid. The containers are permanently marked with the month and year of production, mold number, material identification, patent number, model, and manufacture's insignia.

WORKMANSHIP:

The Otto MSD-65E plastic material — high-density polyethylene — is manufactured from virgin raw materials by major petrochemical companies, (e.g., Exxon, Chevron-Phillips, Quantum) and includes no recycled or regenerated plastic or foreign material. Up to 50% recycled material (PCR) content may be available upon request on particular colors, where suitable feedstock is available.

COLOR:

Otto's standard colors are Dark Blue, Light Blue, Green, Forest Green, Dark Gray, Light Gray, Brown, and Black. Other colors are available to special order.

All injection-molded parts are specifically prepared to be colorfast so that the plastic material does not alter appreciably in normal use. Due to the use of UV (ultraviolet) stable pigment and injection molding process, Otto containers have excellent color fastness.

UV LIGHT STABILIZATION:

The Otto MSD-65E container is stabilized against ultraviolet degradation with not less than 0.3% UV additives. This is a state-of-the-art package that meets or exceeds older systems requiring 0.5% UV additive by weight, and provides product viability for a minimum of 10 years of outdoor exposure.

RECYCLABILITY:

The Otto MSD-65E container is produced with a fully recyclable thermoplastic High Density Polyethylene (HDPE) resin. This allows the material to be recycled and reused after the useful life of the container.

QUALITY ASSURANCE PROCEDURES AND PERFORMANCE TESTING:

The Otto MSD-65E Container is designed to withstand the following series of performance tests. The performance test requirements were designed to simulate the

© OTTO ENVIRONMENTAL SYSTEMS NORTH AMERICA, INC.

type of situations encountered in actual use. The severity of some tests was scaled to anticipate an expected 10-year life.

Test Description	Test Requirements
Semi-Automated Lifter Life Cycle	ANSI Z245.30-2008
Fully-Automated Lifter Life Cycle	ANSI Z245.30-2008
Drop Test (200 Lb. @ 12 Feet)	10 Drops without Damage
Wind Test	See 3rd party wind resistance testing
Axle Durability (Bend) Test	ANSI Z245.30-2008
Durability During Pulling Test	ANSI Z245.30-2008

The following Quality Assurance tests are performed according to ASTM procedures.

Material Testing

1. Melt Flow Index Test: To check that the polymer batch matches the supplier certification. This is testing procedure ASTM D1238.
2. Colorant Color Match: Compare lot based color chips to the color chip master to ensure consistency.

In-Process Quality Tests

1. Drop Test: Cart is raised 12' under load and dropped 4 consecutive times. This provides that there is not a processing issue.
    a. 65 gallon- 200lbs
2. Bib Pull Test: Bib pulled to failure to evaluate brittleness. Bib should break tensile.
3. Bar Pull Test: Bar pulled to failure. Determines if there is weakness at knit line at center of plastic bar. Bar should break off center.
4. Fit Checks: Mating components (axle, lift bar, lid) installed onto carts after cooled to ensure proper fit, form & function.
5. Weight & Thickness Checks: Evaluates molding process.

All designs, specifications, and components are subject to change at the manufacturer's sole discretion at any time without notice. Data published herein is informational in nature and shall not be construed to warranty suitability of the unit for any particular purpose as performance may vary with the conditions encountered.

© OTTO ENVIRONMENTAL SYSTEMS NORTH AMERICA, INC.

65 Gallon Edge Roll-Out Cart

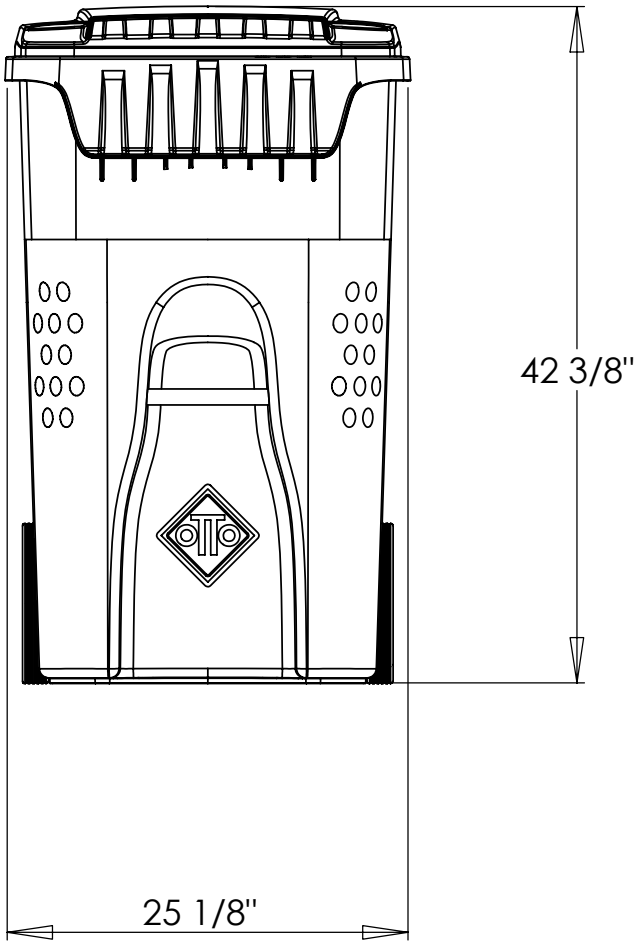

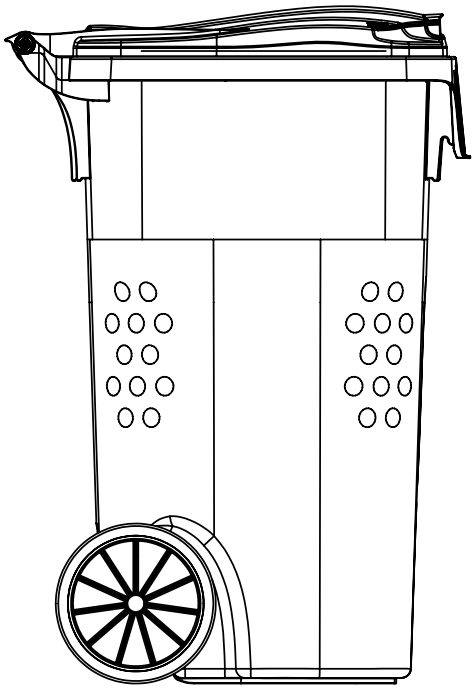

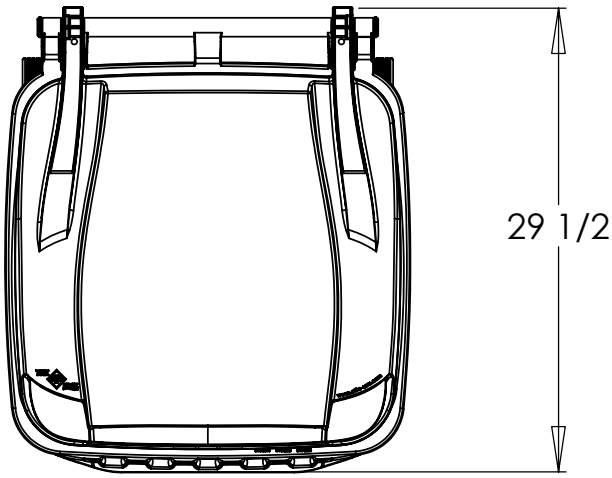

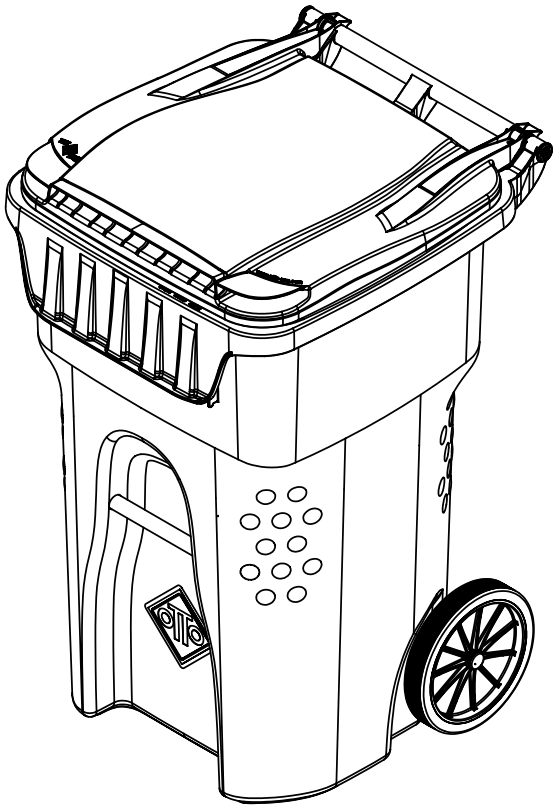

REV June 2010

This Product is ANSI Compliant

TESTING REPORT

DATE: 20 April 2009
SUBJECT: Trash carts
PRODUCT IDENTIFICATION: MSD-65E

TEST: **WIND TUNNEL**

TEST DESCRIPTION: This test is a measure of the stability of the cart in a high wind. Although not specifically tied to the basic purpose of the cart, most consumers would object to a cart that often tipped over and spilled the contents.

MINIMUM PERFORMANCE STANDARD: The specification varies from site to site depending upon prevalent wind conditions, etc. Most manufacturers expect the cart to be stable up to at least 30 mph.

TEST PROCEDURE:

1. A large wind tunnel with a 54 inch diameter exit opening is used for the test. The wind was supplied by a Gates Super HC drive.
2. Position the cart 48 inches from the end of the exit opening. (Beyond stagnant air zone.)
3. The bottom of the cart is to be level with the exit opening and is to rest on a concrete surface that has a surface texture similar to a roadway.
4. The bottom of the cart is placed against a 6 inch brace (like a curb) to prevent the cart from rolling or sliding.
5. The wind velocity is raised until the cart starts to move. This wind speed is measured using a certified volometer.
6. Measure the air velocity to tip the cart, either free-standing or against the curb if it has rolled or slid.
7. Test cart in three orientations toward the wind tunnel opening – front, side and back.
8. The procedure was performed using a blow-molded wheel and then repeated using an injection molded wheel with rubber tread.

TEST RESULTS:

Test	Orientation Towards Wind Tunnel		
	Front	Side	Back
Wind speed to tip the cart	40 mph	44 mph	46 mph

SUMMARY: The cart was stable in moderate to high winds.

A. Brent Strong
Professor, Manufacturing Engineering
Brigham Young University
265 CTB, Provo, UT 84602

bab

Structural Engineering Services, PLLC
3017Clark Street Charlotte NC
Phone: 704.507.4014
E-mail: bbarfield@babstruct.com

TESTING REPORT

DATE: 15 July 2015
SUBJECT: Trash carts
PRODUCT IDENTIFICATION: MSD-65E

TEST: **SLOPE STABILITY**

TEST DESCRIPTION: This test checks the static stability of an empty and loaded cart on a defined slope (5 degrees).

MINIMUM PERFORMANCE STANDARD: ANSI Z245.30 requires that the cart must stand, without tipping or moving, in three different orientations on a defined slope. ANSI Z245.60 establishes dimensional requirements for the cart.

TEST PROCEDURE (Meets the requirements of ANSI Z245.30):

1. Prepare a ramp with a slope of 5 degrees. The ramp must be of sufficient size that a cart can be moved onto the cart with no portion of the cart overhanging the edges of the ramp.
2. There is to be no wind.
3. Move an empty cart onto the ramp and orient the cart with the front of the cart facing up the ramp. Note any tipping or movement. Tum the cart so that the front of the cart is facing sideways on the ramp. Note any tipping or movement. Tum the cart so that the front of the cart is facing down the ramp. Note any tipping or movement.
4. Repeat step two with the cart loaded to the standard loading as specified in the ANSI standard. The loading material to occupy at least 70% of the capacity of the cart.

TEST RESULTS:

	Orientation	Result
Empty	Front facing upward	Stable
	Front facing sideways (right)	Stable
	Front facing sideways (left)	Stable
	Front facing downward	Stable
Filled (loaded lbs)	Front facing upward	Stable
	Front facing sideways (right)	Stable
	Front facing sideways (left)	Stable
	Front facing downward	Stable

SUMMARY: The cart passed the ANSI Z245.30 and Z245.60 standards since non-movement in three orientations is met.

Sincerely,

Blaine A. Barfield, P.E.

bab Structural Engineering
Services, PLLC

NORTH CAROLINA PROFESSIONAL SEAL 035798 ENGINEER BLAINE A. BARFIELD

07-15-2015

bab

Structural Engineering Services, PLLC
3017Clark Street Charlotte NC
Phone: 704.507.4014
E-mail: bbarfield@babstruct.com

TESTING REPORT

DATE: 15 July 2015
SUBJECT: Trash carts
PRODUCT IDENTIFICATION: MSD-65E

TEST: **LID TEST**

TEST DESCRIPTION: To determine if a container lid will sustain the weight of an average child (approximately 80 pounds) without collapsing into the container.

MINIMUM PERFORMANCE STANDARD: According to ANSI Z245.30, the lid of the cart must withstand a load of 80 pounds without collapsing or allowing the loading weight to fall into the container. ANSI Z-245.60 establishes dimensional requirements for the cart.

TEST PROCEDURE (Meets the requirements of ANSI Z245.30):

1. The cart is placed on a smooth, level, horizontal surface.
2. A weight of 80 pounds with a surface area diameter round of 8 inches is placed on the lid of the cart.
3. The test is to be conducted at room temperature.

TEST RESULTS:

The lid did not collapse or excessively deflect during the test.

SUMMARY: The cart passed the test at or above minimum requirements as specified in ANSI Z245.30 and Z245.60.

Sincerely,

Blaine A. Barfield, P.E.
bab Structural Engineering Services, PLLC

NORTH CAROLINA PROFESSIONAL SEAL 035798 ENGINEER BLAINE A. BARFIELD

7-15-2015

bab

Structural Engineering Services, PLLC
3017Clark Street Charlotte NC
Phone: 704.507.4014
E-mail: bbarfield@babstruct.com

TESTING REPORT

DATE: 15 July 2015
SUBJECT: Trash carts
PRODUCT IDENTIFICATION: MSD-65E

TEST: **LOADING AND UNLOADING (CYCLE TEST) -AUTOMATED**

TEST DESCRIPTION: The loading and unloading test is designed to approximate the useful life of a cart (10 years) in the actual lifting that is performed when emptying the cart into a semi- automated truck. This test is useful in assessing the overall design (such as the lid fit, handle material and hinge mechanism, wheel assembly strength, etc.) and overall durability.

MINIMUM PERFORMANCE STANDARD: ANSI standard Z245.30-2008 requires that after testing the cart should not suffer any damage or permanent deformation such that it cannot be safely used in normal operation. ANSI Z-245.60-2008 establishes dimensional requirements for the cart.

TEST PROCEDURE (Meets the requirements of ANSI Z245.30-2008):

1. The test is conducted at room temperature.
2. A standard automated lifting mechanism is used. This lifter is compatible with all currently used carts. The lifting mechanism is attached to a stationary frame which allows the cart to be emptied and then reloaded on each cycle.
3. The cycle time is greater than eight seconds, as required in the standard.
4. The cart is loaded with inert material at 3.5 pounds per gallon according to the rated size of the container. The loading material is to occupy at least 70% of the volume of the cart.
5. The cart is positioned in front of the lifting mechanism and is then engaged by the lifter and lifted to empty the cart into a bin. The cart is set down onto a concrete surface and is held stationary as it is reloaded by tipping the bin to allow the weights to re-enter the cart.
6. Inspections are made whenever any change is noticed and after every 100 lifts.
7. Failure is judged to be cracks, holes or other induced defects or deformations in the cart that would prevent the cart's use as a trash cart and be emptied by the automated method.

TEST RESULTS:

Cycles	Comments on Performance
520	No significant damage

SUMMARY: The cart passed the ANSI Z245.30-2008 and Z245.60-2008 standards for minimum performance.

Sincerely,

Blaine A. Barfield, P.E.
bab Structural Engineering Services, PLLC

NORTH CAROLINA PROFESSIONAL SEAL 035798 ENGINEER BLAINE A. BARFIELD

07-15-2015

bab

Structural Engineering Services, PLLC
3017Clark Street Charlotte NC
Phone: 704.507.4014
E-mail: bbarfield@babstruct.com

TESTING REPORT

DATE: 15 July 2015
SUBJECT: Trash carts
PRODUCT IDENTIFICATION: MSD-65E

TEST: **LOADING AND UNLOADING (CYCLE TEST)-SEMI-AUTOMATED**

TEST DESCRIPTION: The loading and unloading test is designed to approximate the useful life of a cart (10 years) in the actual lifting that is performed when emptying the cart into a semi- automated truck. This test is useful in assessing the overall design (such as the lid fit, handle material and hinge mechanism, wheel assembly strength, etc.) and overall durability.

MINIMUM PERFORMANCE STANDARD: ANSI standard Z245.30-2008 requires that after testing the cart should not suffer any damage or permanent deformation such that it cannot be safely used in normal operation. ANSI Z-245.60-2008 establishes dimensional requirements for the cart.

TEST PROCEDURE (Meets the requirements of ANSI Z245.30-2008):

1. The test is conducted at room temperature.
2. A standard semi-automated lifting mechanism is used. This lifter is compatible with all currently used carts. The lifting mechanism is attached to a stationary frame which allows the cart to be emptied and then reloaded on each cycle.
3. The cycle time is greater than eight seconds, as required in the standard.
4. The cart is loaded with inert material at 3.5 pounds per gallon according to the rated size of the container. The loading material is to occupy at least 70% of the volume of the cart.
5. The cart is positioned in front of the lifting mechanism and is then engaged by the lifter and lifted to empty the cart into a bin. The cart is set down onto a concrete surface and is held stationary as it is reloaded by tipping the bin to allow the weights to re-enter the cart.
6. Inspections are made whenever any change is noticed and after every 100 lifts.
7. Failure is judged to be cracks, holes or other induced defects or deformations in the cart that would prevent the cart's use as a trash cart and be emptied by the automated method

TEST RESULTS:

Cycles	Comments on Performance
520	No significant damage

SUMMARY: The cart passed the ANSI Z245.30-2008 and Z245.60-2008 standards for minimum performance. (Includes cavities 3, 4, and 5 plastic and metal bar)

Sincerely,

Blaine A. Barfield, P.E.
bab Structural Engineering Services, PLLC

NORTH CAROLINA PROFESSIONAL SEAL 035798 ENGINEER BLAINE A. BARFIELD

7-15-2015

bab

Structural Engineering Services, PLLC
3017Clark Street Charlotte NC
Phone: 704.507.4014
E-mail: bbarfield@babstruct.com

TESTING REPORT

DATE: 15 July 2015
SUBJECT: Trash carts
PRODUCT IDENTIFICATION: MSD-65E

TEST: **DURABILITY DURING PULLING (CURB TEST)**

TEST DESCRIPTION: This test determines whether the cart's handles, wheels, and axles will withstand the repeated pulling forces experienced during normal 10-year useful life.

MINIMUM PERFORMANCE STANDARD: The ANSI standard Z245.30-2008 requires that after testing the handles, wheels, axles, their attachments to the container, and the container itself must remain functional. ANSI Z245.60-2008 establishes dimensional requirements for the cart.

TEST PROCEDURE (Meets the requirements of ANSI Z245.30-2008):

1. The cart is loaded with a standard load (according to the ANSI standard) with the volume of material occupying at least 70% of the total capacity of the cart. (The actual weight was 240 pounds.)
2. Using the cart's handles, the loaded cart is pushed off a curb. The curb height was 5.5 inches. The cart is then repositioned at the top of the curb. The test is repeated for 520 cycles (drops).
3. Using the cart's handles, an unloaded (empty) cart is pulled up a curb. The curb height was 5.5 inches. The cart is repositioned at the bottom of the curb. The test is repeated 520 cycles (lifts).
4. The carts are set down onto a concrete surface.
5. The temperature to be normal room temperature (73 degrees F).

TEST RESULTS:

Test Condition	Result
Push off of full cart	No significant damage.
Pull up of empty cart	No significant damage

SUMMARY: The cart passed the ANSI Z245.30-2008 and Z245.60-2008 standards for minimum performance.

Sincerely,

Blaine A. Barfield, P.E.
bab Structural Engineering Services, PLLC

NORTH CAROLINA PROFESSIONAL SEAL 035798 ENGINEER BLAINE A. BARFIELD

07/15/2015

bab

Structural Engineering Services, PLLC
3017Clark Street Charlotte NC
Phone: 704.507.4014
E-mail: bbarfield@babstruct.com

TESTING REPORT

DATE: 15 July 2015
SUBJECT: Trash carts
PRODUCT IDENTIFICATION: MSD-65E

TEST: **CENTER OF BALANCE POSITION**

TEST DESCRIPTION: To determine the height of the handle of a two-wheeled container at the center-of-balance position. This height affects the ease of operation of the cart.

MINIMUM PERFORMANCE STANDARD: According to the ANSI standard Z245.30, when in the center-of-balance position, the minimum height is to be 29 inches. The maximum height is to be 40 inches when in the center-of-balance position. ANSI Z245.60 establishes dimensional requirements for the cart.

TEST PROCEDURE (Meets the requirements of ANSI Z245.30):

1. The cart is loaded with a standard load (3.5 pounds per gallon of rated capacity with the load occupying at least 70% of the capacity) or with the maximum rated load.
2. The test to be conducted on a hard, flat surface.
3. Block the wheels so that the cart will not roll.
4. Tip the cart slowly, rotating the cart on the wheels, to the center balance position. This position is determined as the position where the cart has a tendency to remain in a balanced (neutral) position, not tipping forward or backward.
5. When in the center balance position, place blocks under the container to maintain in balanced position.
6. Measure the distance vertically from the ground plane to the center line of the handle of the cart. The accuracy of measurement is to be ±0.25 inches.
7. Repeat steps 4, 5 and 6 and then average the results for the three determinations.

TEST RESULTS:
The results are: Average = 35.5 inches

SUMMARY: The cart passed the ANSI Z245.30 and Z245.60 standards.

Sincerely,

Blaine A. Barfield, P.E.
bab Structural Engineering
Services, PLLC

NORTH CAROLINA PROFESSIONAL SEAL 035798 ENGINEER BLAINE A. BARFIELD

07-17-2015

bab

Structural Engineering Services, PLLC
3017Clark Street Charlotte NC
Phone: 704.507.4014
E-mail: bbarfield@babstruct.com

TESTING REPORT

DATE: 15 July 2015
SUBJECT: Trash carts
PRODUCT IDENTIFICATION: MSD-65E

TEST: **FORCE TO TIP**

TEST DESCRIPTION: To measure the strength required to start container movement to the balance point and to ensure that the force is not greater than an established limit. This force relates to the ease of operation of the cart.

MINIMUM PERFORMANCE STANDARD: According to ANSI Z245.30, the force must not exceed 120pounds force. ANSI Z-245.60 establishes dimensional requirements for the cart.

TEST PROCEDURE (Meets the requirements of ANSI Z245.30):

1. The cart is to be loaded with a standard load. (3.5 pounds of material per gallon of rated capacity. (The load to occupy at least 70% of the capacity of the cart.)
2. The ground to be level and with a smooth horizontal surface having less than a 1E slope.
3. The cart is to be blocked to prevent movement of the wheels.
4. A spring scale or other force-measuring device is attached to the handle of the cart. (The force-measuring device to have an accuracy of less than ±3%.) The cart is then tipped by pulling on the force-measuring device, until the cart is in the balanced position. The angle of pull, that is, the tipping force direction, is to be horizontal with less than ±2E to all sides. (The position where the cart does not tend to move either forward or backward but remains in a balanced position.) The maximum force during the pull is noted.
5. Repeat step 4 so that three determinations are made. These results are averaged.
6. The test is to be conducted at room temperature.

TEST RESULTS:
The tipping forces were as follows: Average = 60 pounds.

SUMMARY: The cart passed the ANSI Z245.30 and Z245.60 standards at or above the minimum requirements.

Sincerely,

Blaine A. Barfield, P.E.
bab Structural Engineering Services, PLLC

NORTH CAROLINA PROFESSIONAL SEAL 035798 ENGINEER BLAINE A. BARFIELD

07-15-2015

bab

Structural Engineering Services, PLLC
3017Clark Street Charlotte NC
Phone: 704.507.4014
E-mail: bbarfield@babstruct.com

TESTING REPORT

DATE: 15 July 2015
SUBJECT: Trash carts
PRODUCT IDENTIFICATION: MSD-65E

TEST: **VOLUMETRIC LOADING CAPACITY**

TEST DESCRIPTION: To determine the volume of a container

MINIMUM PERFORMANCE STANDARD: The volumetric loading capacity of the container should be measured according to ANSI Z245.30-2008. ANSI 2245.60-2008 establishes dimensional requirements for the cart.

TEST PROCEDURE (Meets the requirements of ANSI Z245.30-2008):

1. The volume of the cart is measured using the tank (immersion) method.
2. The empty cart is placed inside a tank with sufficient capacity to receive the container to be tested. The container must be level (that is, not inclined).
3. Simultaneously fill the tank and the container with water at a standard temperature (59°F).
4. Measure the volume of water inside the container to an accuracy of ±2 percent.
5. Repeat the capacity method and determine the volumetric capacity of the lid.

TEST RESULTS:
The cart had a capacity of 65.1 gallons. The lid had a capacity of 2 gallons.

SUMMARY: The cart passed the test at or above minimum requirements as specified in ANSI Z245.30-2008 and Z245.60-2008.

Sincerely,

Blaine A. Barfield, P.E.
bab Structural Engineering Services, PLLC

NORTH CAROLINA PROFESSIONAL SEAL 035798 ENGINEER BLAINE A. BARFIELD

7-15-2015